VIBRO-ACOUSTICS®

Member VISCMA

Noise Control | Vibration Isolation | Restraint Systems

tel: 416-291-7371 1-800-565-8401
fax: 416-291-8049 1-888-811-2264

web: www.vibro-acoustics.com
eml: info@vibro-acoustics.com

Integral Steel Fan Bases

IFB

File No.:	DS-IFB-001	Date:	17 May 2013
Supersedes:	New	Date:	New

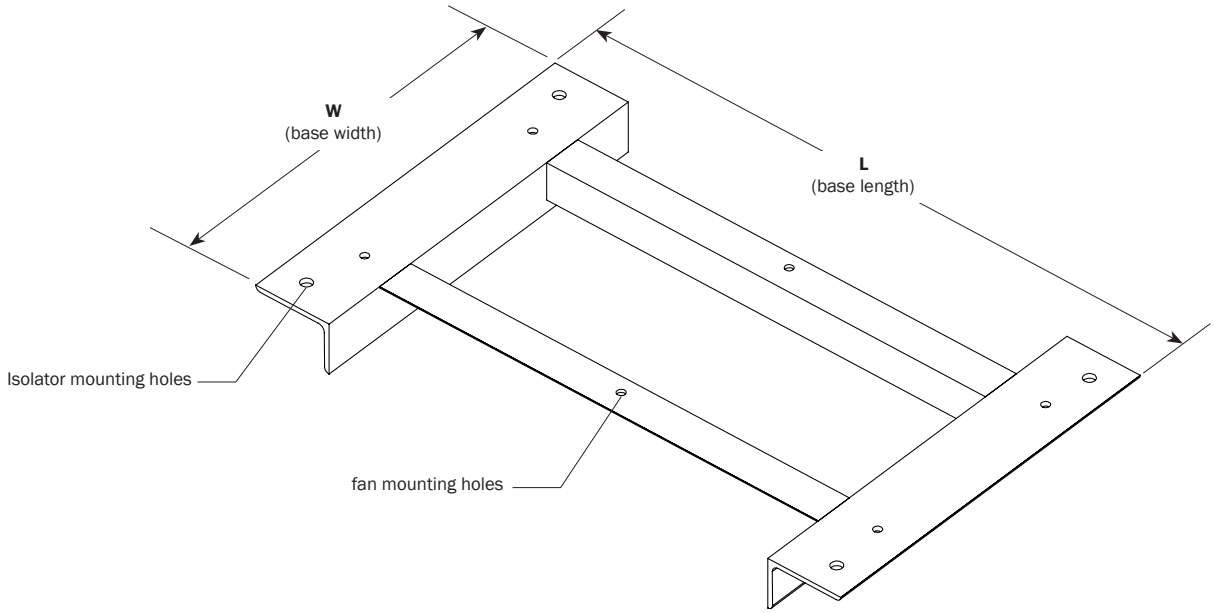

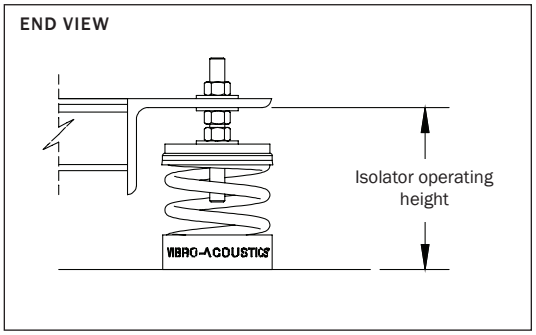

IFB base shown with FS type isolator. Other types may be used.

STANDARD OPTIONS (not shown in diagram)

- ☐ Motor slide rail support
- ☐ Special finish
  - ☐ Hot-dip galvanized
  - ☐ Epoxy paint
  - ☐ Enamel paint

Equipment			Base Dimensions and Weight			Isolation	
Manufacturer	**Model**	**Operating Weight** (lb)	**L** (in)	**W** (in)	**Base Weight** (lb)	**Isolator Nominal Deflection** (in)	**Total Operating Weight** (lb)

Project:			plan view of mount locations	1: / 6:
Customer:				2: / 7:
Consultant:				3: / 8:
Dwg No.:	**Rev:**	**Drawn by:**		4: / 9:
V-A Project Manager:				5: / 10:
				QTY of sets required:
TAG:			EQUIPMENT:	
COMMENTS:				DATE:

This datasheet is not intended for final submittal purposes