VIBRO-ACOUSTICS®
A Swegon Group company
MEMBER VISCMA

tel: 416-291-7371 1-800-565-8401
fax: 416-291-8049 1-888-811-2264
web: www.vibro-acoustics.com
eml: info@vibro-acoustics.com

2″ (51 mm) Deflection SH Spring Hangers

SH-2

File No.: DS-SH2-009 Date: 24 Feb 2016
Supersedes: DS-SH2-008 Date: 16 Jun 2015

SH-2N

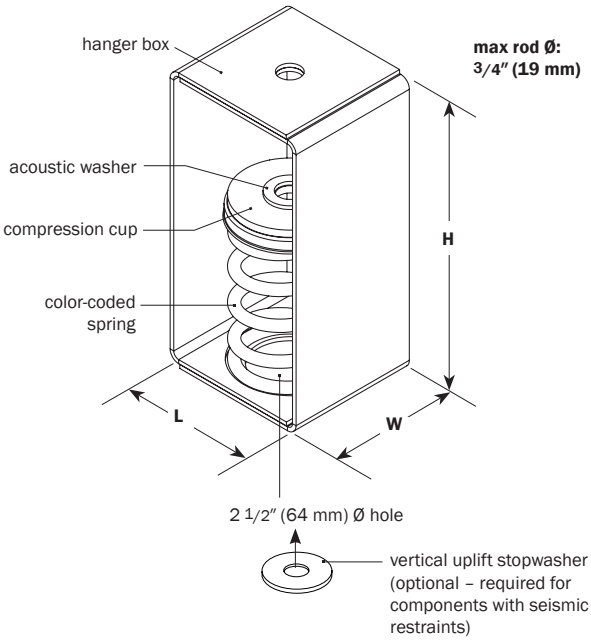

SH-2S

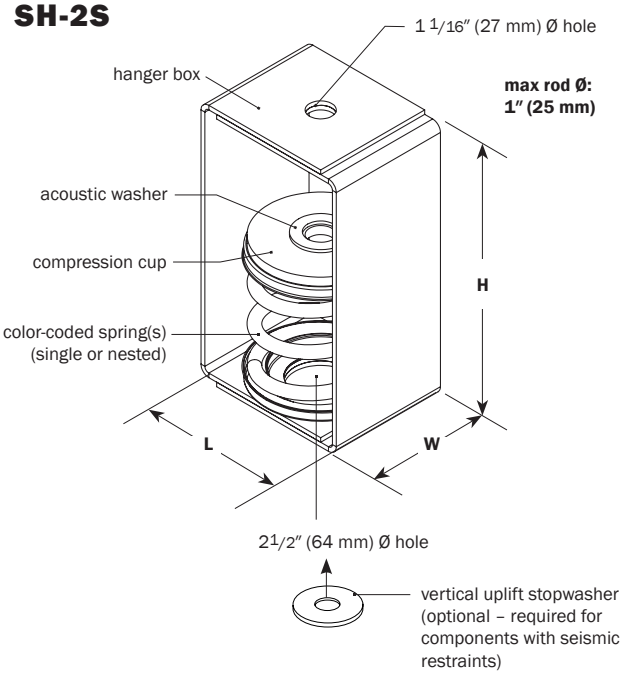

PERFORMANCE

Model	Spring Color	Rated Load		Deflection at rated load		Isolator Weight †	
	outer-inner	lb	kN	in	mm	lb	kg
SH-2N-50	Red	**50**	0.22	**2.0**	51	**7.2**	3.3
SH-2N-100	White	**100**	0.44	**2.0**	51	**7.3**	3.3
SH-2N-200	Orange	**200**	0.89	**2.0**	51	**7.9**	3.6
SH-2N-300	Green	**300**	1.33	**2.1**	53	**7.9**	3.6
SH-2N-400	Grey	**400**	1.78	**2.0**	51	**8.1**	3.7
SH-2N-500	Yellow	**500**	2.22	**2.1**	53	**8.3**	3.7
SH-2N-600	Blue	**600**	2.67	**2.0**	51	**8.7**	4.0
SH-2N-800	Black	**800**	3.56	**2.1**	53	**8.4**	3.8
SH-2N-1000	Ivory	**1000**	4.45	**2.0**	51	**8.8**	4.0
SH-2S-800	Green	**800**	3.56	**2.0**	51	**16.5**	7.5
SH-2S-900	Green-White	**900**	4.00	**2.0**	51	**17.2**	7.8
SH-2S-1000	Green-Orange	**1000**	4.45	**2.0**	51	**17.8**	8.1
SH-2S-1100	Green-Green	**1100**	4.89	**2.0**	51	**17.8**	8.1
SH-2S-1200	Green-Grey	**1200**	5.34	**2.0**	51	**18.1**	8.2
SH-2S-1300	Green-Yellow	**1300**	5.78	**2.0**	51	**18.2**	8.3
SH-2S-1400	Green-Blue	**1400**	6.23	**2.0**	51	**18.7**	8.5
SH-2S-1600	Green-Black	**1600**	7.12	**2.1**	53	**18.3**	8.3
SH-2S-1800	Green-Ivory	**1800**	8.01	**2.0**	51	**18.7**	8.5

† weights are approximate

DIMENSIONS: SH-2N

Model	L		W		H	
SH-2N	in	mm	in	mm	in	mm
50–1000	**5**	127	**4**	102	**10 1/4**	260

DIMENSIONS: SH-2S

Model	L		W		H	
SH-2S	in	mm	in	mm	in	mm
800–1800	**6 1/2**	165	**5**	127	**11 1/2**	292

NOTES

- Spring hanger with steel spring and welded steel housing
- Hanger is designed to allow support rod misalignment through a 30-degree arc without contacting the hanger box
- Vertical uplift stopwasher must be added on spring hangers for seismically restrained equipment, duct or piping
- Minimum 50% additional travel to solid
- Springs and housings are powder coated
- Compression cups are zinc plated or powder coated
- Higher capacities are available. Contact Vibro-Acoustics for more information.

Project:		plan view of hanger locations	1:	6:
Customer:			2:	7:
Consultant:			3:	8:
Dwg No.:	**Rev:**	**Drawn by:**	4:	9:
V-A Project Manager:			5:	10:
			QTY of sets required:	
TAG:		EQUIPMENT:		
COMMENTS:				DATE: