VIBRO-ACOUSTICS®
A Swegon Group company

MEMBER VISCMA

tel: 416-291-7371 1-800-565-8401
fax: 416-291-8049 1-888-811-2264
web: www.vibro-acoustics.com
eml: info@vibro-acoustics.com

Double Anchor Bracket — DAB

File No.: DS-DAB-01	Date: 20 Dec 2016
Supersedes: New	Date: New

DAB-6

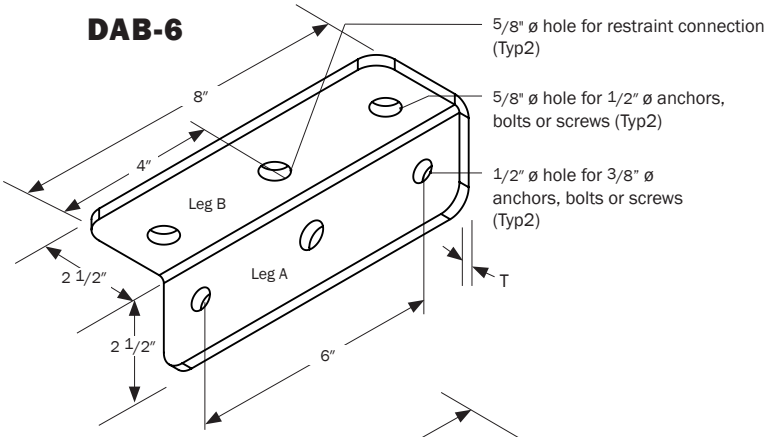

DAB-12

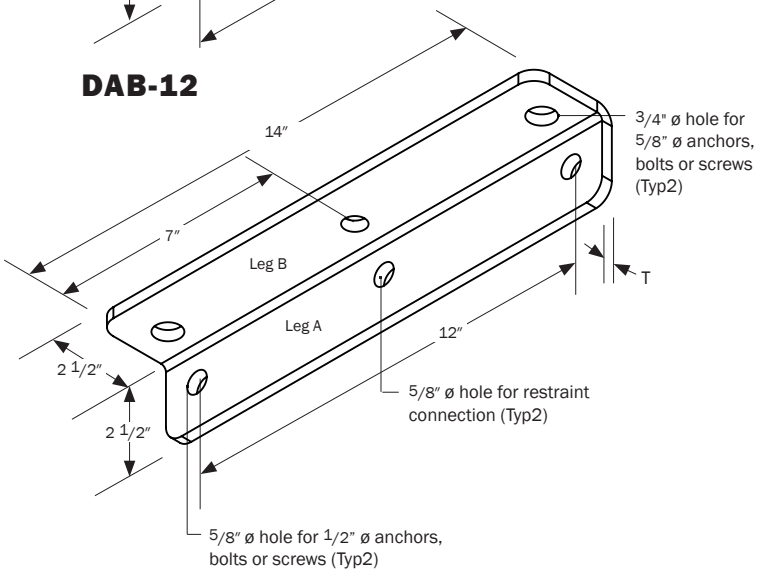

Fig. 1
Installation configuration for metal deck

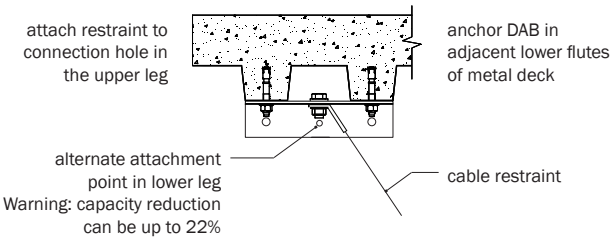

PERFORMANCE

Model	Maximum Tension Load in Attached Restraint							
	6" Concrete		Metal B Deck		Metal W Deck		Wood	
	lb	kN	lb	kN	lb	kN	lb	kN
DAB-6	**1400**	6.23	**1400**	6.23	-	-	**1400**	6.23
DAB-12	**2000**	8.90	-	-	**1817**	8.08	**2000**	8.90

Rated loads based on:
- 30° – 60° restraint installation angle
- 4000 psi concrete
- Hilti KB-TZ anchors
- Metal deck with minimum 3.25" concrete cover (per Fig. 1)
- Wood thickness at least 8 × anchor diameter
- See BB-AL for additional requirements and load ratings for other constructions

DIMENSIONS

Model	Restraint Connection Max Bolt Diameter		Leg A Anchor Diameter		Leg B Anchor Diameter		Angle Thickness T	
	in	mm	in	mm	in	mm	in	mm
DAB-6	**5/8**	16	**3/8**	8.5	**1/2**	13	**1/8**	6
DAB-12	**5/8**	16	**1/2**	13	**5/8**	16	**1/4**	8

† weights are approximate

NOTES
- Brackets for use with restraint kits to restrain non-structural components (e.g., equipment, ductwork, piping and conduit) against seismic, wind, or blast forces. Not meant for gravity loads.
- One bracket required per restraint point; two brackets required per cable restraint kit
- High strength steel formed angles
- Bracket is powder coated for corrosion protection.
- Other materials and finishes available (e.g. stainless steel).

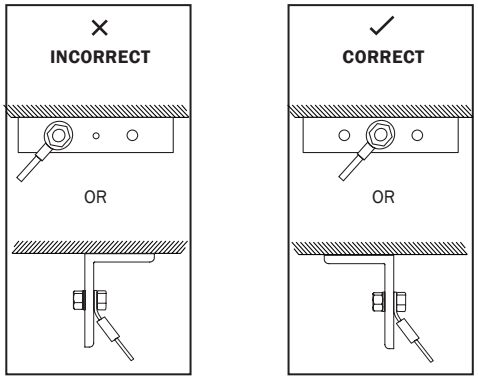

Project:			1:	6:
Customer:			2:	7:
Consultant:			3:	8:
Dwg No.:	Rev:	Drawn by:	4:	9:
V-A Project Manager:			5:	10:
			QTY of sets required:	
TAG:		EQUIPMENT:		
COMMENTS:				DATE: