VIBRO-ACOUSTICS®
A Swegon Group company
MEMBER VISCMA

tel: 416-291-7371 1-800-565-8401
fax: 416-291-8049 1-888-811-2264
web: www.vibro-acoustics.com
eml: info@vibro-acoustics.com

1″ (25 mm) Deflection SHR Spring Hangers with Neoprene

SHR-SN

File No.: DS-SHRSN-007 Date: 28 Feb 2014
Supersedes: DS-SHRSN-006 Date: 16 Sep 2011

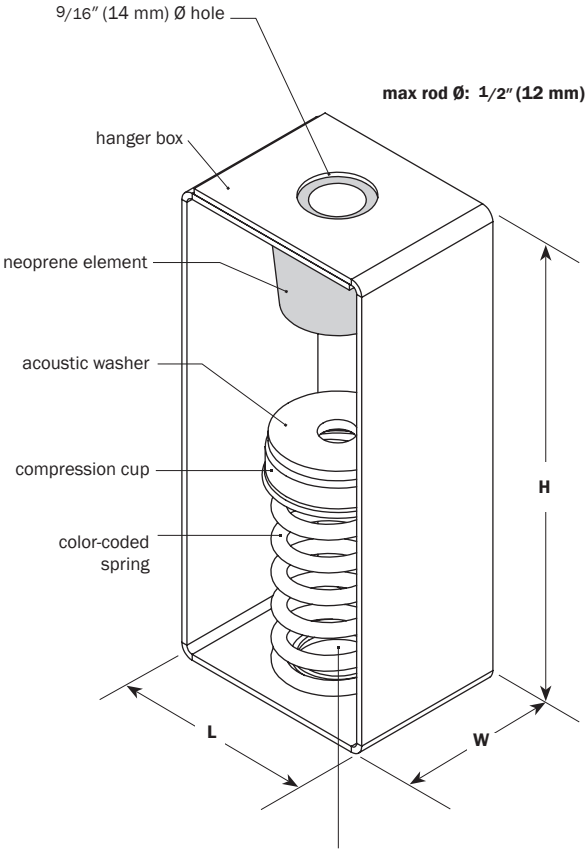

vertical uplift stopwasher
(optional – required for components with seismic restraints)

PERFORMANCE

Model	Spring Color	Element Color	Rated Load lb	Rated Load kN	Deflection at rated load in	Deflection at rated load mm	Isolator Weight † lb	Isolator Weight † kg
SHR-SN-15	White	Orange	**15**	0.07	**1.0**	25	**1.0**	0.4
SHR-SN-30	Yellow	Orange	**30**	0.13	**1.0**	25	**1.0**	0.4
SHR-SN-45	Orange	Blue	**45**	0.20	**1.0**	25	**1.0**	0.5
SHR-SN-60	Red	Blue	**60**	0.27	**1.0**	25	**1.0**	0.5
SHR-SN-100	Blue	Green	**100**	0.44	**1.0**	25	**1.1**	0.5
SHR-SN-150	Black	Red	**150**	0.67	**1.0**	25	**1.1**	0.5
SHR-SN-200	Grey	Black	**200**	0.90	**1.0**	25	**1.2**	0.5

for additional loads, see SHR-1 † weights are approximate

DIMENSIONS

Model SHR-SN	L in	L mm	W in	W mm	H in	H mm
15–200	**2 3/4**	70	**2**	51	**6 1/4**	152

NOTES

- Spring hanger with steel spring and neoprene element in a welded steel housing
- Vertical uplift stopwasher must be added on spring hangers for seismically restrained equipment, duct or piping
- Minimum 50% addition travel to solid
- Springs are powder coated, housings and cups are galvanized

Project:		plan view of hanger locations	1:	6:
Customer:			2:	7:
Consultant:			3:	8:
Dwg No.:	**Rev:**	**Drawn by:**	4:	9:
V-A Project Manager:			5:	10:
			QTY of sets required:	
TAG:		EQUIPMENT:		
COMMENTS:				DATE: