VIBRO-ACOUSTICS®
A Swegon Group company

MEMBER VISCMA

tel: 416-291-7371 1-800-565-8401
fax: 416-291-8049 1-888-811-2264
web: www.vibro-acoustics.com
eml: info@vibro-acoustics.com

4" (102 mm) Deflection SCSR Seismic Restrained Spring Isolators (for Concrete)

SCSR-4A

For Concrete Structure

File No.: DS-SCSR4-C-001 Date: 11 Oct 2016
Supersedes: New Date: New

SCSR-4A (200–4400)

shown with cut-away

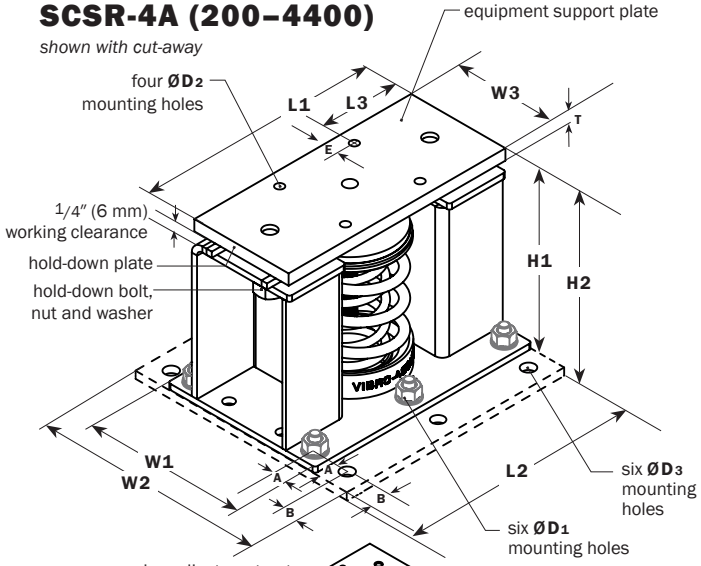

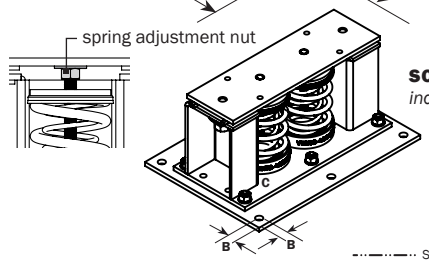

SCSR-4A (4800–8800)
includes two spring assemblies

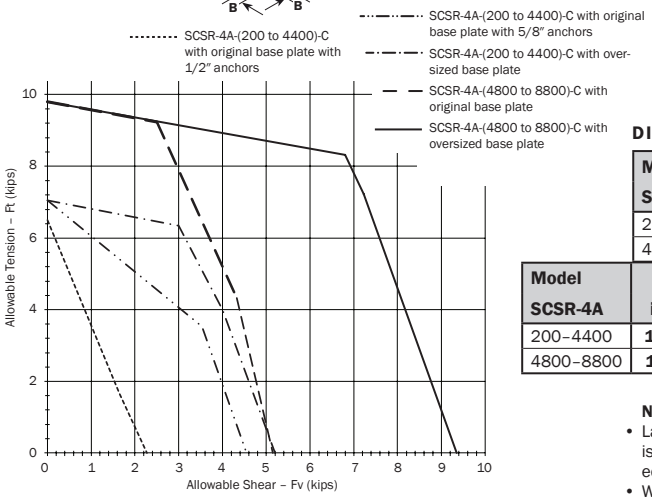

For attachment to concrete structure:

1. SCSR-4A-(200 to 4400)-C loads are based on using (6) 1/2" hilti kbtz @ 2" emb. on 4" 3000 psi cracked concrete with 12" edge distance
2. SCSR-4A-(200 to 4400)-C loads are based on using (6) 5/8" hilti kbtz @ 4" emb. on 6" 3000 psi cracked concrete with 12" edge distance
3. SCSR-4A-(200 to 4400)-C with oversized baseplate loads are based on using (6) 5/8" hilti kbtz @ 4" emb. on 6" 3000 psi cracked concrete with 12" edge distance
4. SCSR-4A-(4800 to 8800)-C loads are based on using (6) 5/8" hilti kbtz @ 4" emb. on 6" 3000 psi cracked concrete with 12" edge distance
5. SCSR-4A-(4800 to 8800)-C loads with oversized baseplate are based on using (6) 3/4" hilti kbtz @ 4-3/4" emb. on 8" 4000 psi cracked concrete with 12" edge distance
6. SCSR ratings for concrete are determined in accordance with ACI 318-11

PERFORMANCE

Model	Spring Color outer-inner	Rated Load lb	kN	Deflection at rated load in	mm	Isolator Weight † lb	kg
SCSR-4A-200	Blue	**200**	0.89	**4.0**	102	**74.6**	33.8
SCSR-4A-400	Blue-Blue	**400**	1.78	**4.0**	102	**75.6**	34.3
SCSR-4A-600	Red	**600**	2.67	**4.0**	102	**72.6**	32.9
SCSR-4A-800	Red-Blue	**800**	3.56	**4.0**	102	**72.9**	33.1
SCSR-4A-1000	Red-Red	**1000**	4.45	**4.0**	102	**75.8**	34.4
SCSR-4A-1200	Green	**1200**	5.34	**4.0**	102	**76.2**	34.6
SCSR-4A-1400	Green-Blue	**1400**	6.23	**4.0**	102	**73.3**	33.2
SCSR-4A-1600	Green-Red	**1600**	7.12	**4.0**	102	**75.1**	34.1
SCSR-4A-1800	Green-White	**1800**	8.01	**4.0**	102	**75.6**	34.3
SCSR-4A-2000	Black	**2000**	8.90	**4.0**	102	**76.3**	34.6
SCSR-4A-2200	Black-Blue	**2200**	9.79	**4.0**	102	**76.7**	34.8
SCSR-4A-2400	Black-Red	**2400**	10.68	**4.0**	102	**76.3**	34.6
SCSR-4A-2600	Black-White	**2600**	11.57	**4.0**	102	**77.7**	35.2
SCSR-4A-3000	Black-Black	**3000**	13.34	**4.0**	102	**78.8**	35.7
SCSR-4A-3400	White	**3400**	15.12	**4.0**	102	**78.3**	35.5
SCSR-4A-3800	White-Red	**3800**	16.90	**4.0**	102	**81.9**	37.1
SCSR-4A-4400	White-Black	**4400**	19.57	**4.0**	102	**117.0**	53.1
SCSR-4A-4800	(2)Black-Red	**4800**	21.35	**4.0**	102	**116.3**	52.8
SCSR-4A-5200	(2)Black-White	**5200**	23.13	**4.0**	102	**114.6**	52.0
SCSR-4A-6000	(2)Black-Black	**6000**	26.69	**4.0**	102	**116.6**	52.9
SCSR-4A-6800	(2)White	**6800**	30.25	**4.0**	102	**117.9**	53.5
SCSR-4A-7600	(2)White-Red	**7600**	33.81	**4.0**	102	**123.9**	56.2
SCSR-4A-8800	(2)White-Black	**8800**	39.14	**4.0**	102	**126.0**	57.2

For higher capacities, contact Vibro-Acoustics factory
† weights are approximate
(oversized base plate for 200–4400 is 32 lb., 4800–8800 is 58 lb.)

DIMENSIONS

Model SCSR-4A	L1 in	mm	L2 in	mm	L3 in	mm	W1 in	mm	W2 in	mm	W3 in	mm
200–4400	**15 1/4**	387	**15 1/4**	387	**5**	127	**10 3/8**	264	**14 7/8**	378	**6 5/8**	168
4800–8800	**21 7/8**	556	**24**	610	**5**	127	**10 5/8**	270	**17**	432	**6 7/8**	175

Model SCSR-4A	H1 in	mm	H2 in	mm	A in	mm	B in	mm	E in	mm	ØD1 in	mm	ØD2 in	mm	ØD3 in	mm	T in	mm
200–4400	**11**	280	**11 1/2**	292	**1**	25	**1 1/4**	32	**1**	25	**11/16**	17	**9/16**	14	**7/8**	22	**3/4**	19
4800–8800	**11**	280	**11 1/2**	292	**1**	25	**1 1/4**	32	**1**	25	**11/16**	17	**9/16**	14	**7/8**	22	**3/4**	19

NOTES

- Laterally and vertically restrained spring type isolators with housings and heavy top plates for equipment support
- Welded steel construction housings with vertically restraining limit stops
- Top plate and restraining bolts are designed to be out of contact with housing during normal operation
- Reinforced neoprene elements (snubbers) are incorporated to minimize short-circuiting of restraining bolts
- Minimum 50% additional travel to solid
- Minimum k_x/k_y ratio of 0.8
- Housing is hot-dipped galvanized
- All components are painted, plated, or coated for outdoor applications
- If less than 80% of the top plate is covered by the supported equipment, use an additional plate (same thickness as the isolator's equipment support plate) on top of the isolator. See installation instructions.
- All springs are powder-coated
- Springs supported with neoprene cups for noise isolation
- Springs are pre-compressed to 35% of the capacity inside the housing

OPTIONS ☐ OVERSIZED BASE PLATE

Project:		
Customer:		
Consultant:		
Dwg No.:	**Rev:**	**Drawn by:**
V-A Project Manager:		

plan view of mount locations

1:	6:
2:	7:
3:	8:
4:	9:
5:	10:
QTY of sets required:	

TAG: EQUIPMENT:

COMMENTS: DATE: