VIBRO-ACOUSTICS®
A Swegon Group company

MEMBER VISCMA

tel: 416-291-7371 1-800-565-8401
fax: 416-291-8049 1-888-811-2264
web: www.vibro-acoustics.com
eml: info@vibro-acoustics.com

SPS Seismic Pipe Stand (Fixed Height) and SPSA (Adjustable Height)

SPS-6 SPSA-6

File No.: DS-SPS-003 Date: 11 Nov 2013
Supersedes: DS-SPS-002 Date: 4 Mar 2013

SPS-6

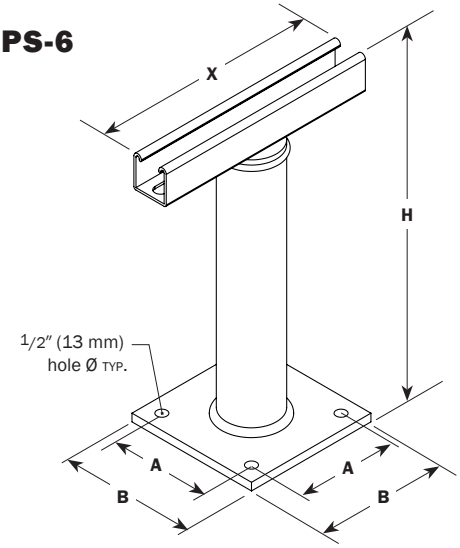

SPS-6: DIMENSIONS AND WEIGHT

Nominal Pipe Size	X		A		B		H		Stand Weight	
	in	mm	**in**	mm	**in**	mm	**in**	mm	**lb**	kg
Up to 6″	**10**	254	**4 1/2**	114	**6**	152	**13 7/8**	342	**10**	4.5

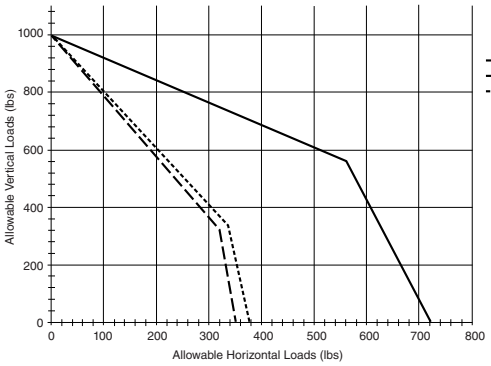

1. Bolted loads are based on using four 3/8″ (10 mm) A307 bolts
2. Concrete loads are based on using four 3/8″ (10 mm) Hilti KB TZ anchors at 2″ (51 mm) embedment and 4 3/4″ (121 mm) edge distance with 4″ thick 3000 psi concrete.

SPSA-6

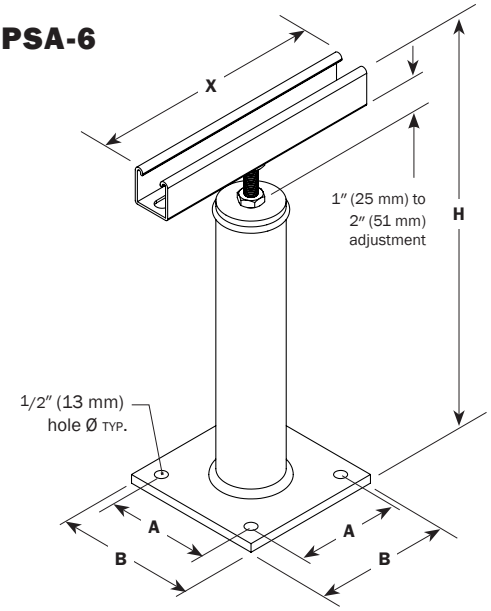

SPSA-6: DIMENSIONS AND WEIGHT

Nominal Pipe Size	X		A		B		Min. H*		Max. H		Stand Weight	
	in	mm	**in**	mm	**in**	mm	**in**	mm	**in**	mm	**lb**	kg
Up to 6″	**10**	254	**4 1/2**	114	**6**	152	**13 7/8**	342	**15 7/8**	403	**11**	5.0

*Min SPSA-6 height is based on having no nuts on the stand.

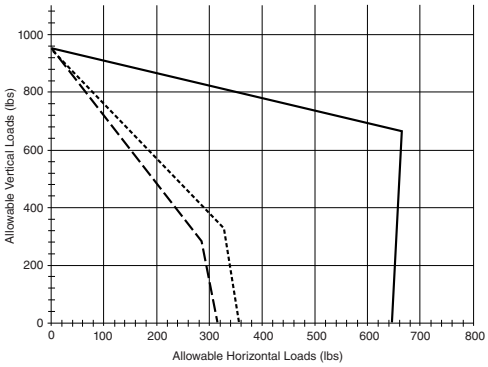

1. Bolted loads are based on using four 3/8″ (10 mm) A307 bolts
2. Concrete loads are based on using four 3/8″ (10 mm) Hilti KB TZ anchors at 2″ (51 mm) embedment and 4 3/4″ (121 mm) edge distance with 4″ thick 3000 psi concrete.

NOTES

- Pipe stands are fabricated with high-strength, low-alloy steel, and are hot dip galvanized for corrosion protection
- Pipe stands must be installed in accordance with installation instructions to provide the above performance
- Foam-filled tube for pipe stands is optional
- Engineering analysis must be performed to ensure adequacy for project-specific conditions
- Bolts are Grade 8 extreme strength steel
- Adjustable pipe stands provide a maximum of 2″ (51 mm) height adjustment, and allowance for roof slopes and for changing pipe sizes

Project:			Comments:
Customer:			
Consultant:			
Dwg No.:	Rev:	Drawn by:	
V-A Project Manager:			
TAG:			
DATE:			