VIBRO-ACOUSTICS®
A Swegon Group company
MEMBER VISCMA

tel: 416-291-7371 1-800-565-8401
fax: 416-291-8049 1-888-811-2264
web: www.vibro-acoustics.com
eml: info@vibro-acoustics.com

AHCS Equipment-Mounted Adjustable Thrust Restraints

AHCS-1

File No.: DS-AHCS1-001 Date: 25 Nov 2010
Supersedes: New Date: New

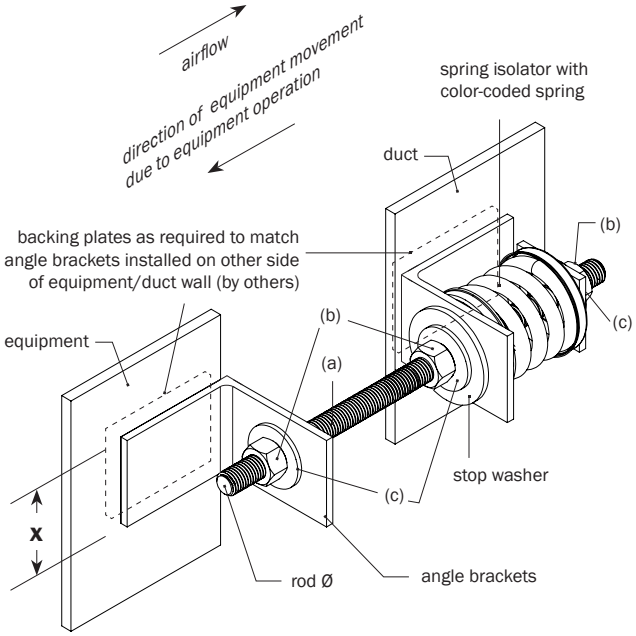

(a) 15″ (381 mm) long threaded rod
(b) Full hex nuts (6 per isolator)
(c) USS washer (5 per isolator)

PERFORMANCE FOR PAIR OF ISOLATORS

Model	Spring Color	Thrust Load Range per Pair of Isolators				Isolator Weight for pair †	
		Non-Precompressed (Min.)		Precompressed (Max.)			
		lb	kN	lb	kN	lb	kg
AHCS-1N-50	Blue	**25**	0.11	**125**	0.56	**12.5**	5.7
AHCS-1N-100	White	**50**	0.22	**250**	1.11	**12.5**	5.7
AHCS-1N-150	Orange	**75**	0.33	**375**	1.67	**12.5**	5.7
AHCS-1N-200	Gray	**100**	0.44	**500**	2.22	**12.5**	5.7
AHCS-1N-300	Black	**150**	0.67	**750**	3.34	**12.7**	5.8
AHCS-1N-400	Green	**200**	0.89	**900**	4.00	**12.7**	5.8
AHCS-1N-500	Yellow	**250**	1.11	**900**	4.00	**12.7**	5.8
AHCS-1N-600	Red	**300**	1.33	**900**	4.00	**12.7**	5.8
AHCS-1N-800	Blue	**400**	1.80	**900**	4.00	**12.9**	5.9
AHCS-1NS-1000	Blue	**500**	2.22	**2500**	11.12	**16.6**	5.9
AHCS-1NS-1500	Red	**750**	3.34	**2800**	12.46	**16.6**	5.9

† weights are approximate

DIMENSIONS: AHCS-1N

Model	X		Rod Ø		Angle Brackets	
AHCS-1N	in	mm	in	mm	in	mm
50–800	**3**	76	**1/2**	13	**4 × 4 × 1/4**	101 × 101 × 6

DIMENSIONS: AHCS-1NS

Model	X		Rod Ø		Angle Brackets	
AHCS-1NS	in	mm	in	mm	in	mm
1000–1500	**4**	102	**5/8**	16	**4 × 4 × 3/8**	101 × 101 × 10

PLAN VIEW DETAIL

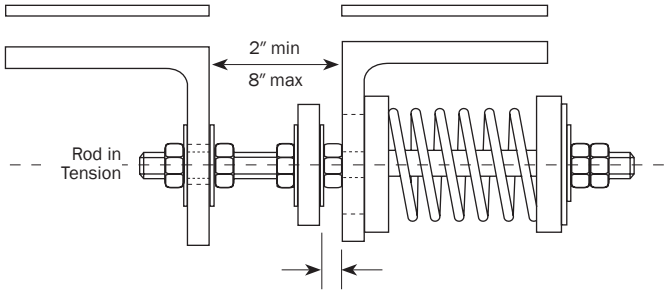

1/4″ (6 mm) operating clearance

NOTES

- Two assemblies required per installation
- Used for base mounted and suspended inline fans
- All parts except backing plates and attachment hardware are supplied by Vibro-Acoustics
- Minimum spring k_x/k_y ratio of 0.8
- All elements safe at solid loading
- All hardware zinc-plated, Grade 2 minimum
- All springs enamel powder-coated
- Brackets prime-painted
- Thrust load range based on min. spring deflection of 0.25″, a max. spring deflection of 1.25″, and angle bracket strength limits.
- Precompression of springs done on site by installing contractor as required.

Project:	Model: QTY of sets required:
Customer:	DWN: CHK: REV: DATE:
Consultant:	TAG: UNIT:
V-A Project No.:	COMMENTS:
V-A Project Manager:	