VIBRO-ACOUSTICS®
A Swegon Group company

MEMBER VISCMA

tel: 416-291-7371 1-800-565-8401
fax: 416-291-8049 1-888-811-2264
web: www.vibro-acoustics.com
eml: info@vibro-acoustics.com

Metal Bellows Expansion Joints

EJM
EJMR

File No.: EJMEJMR-001 Date: 9 Dec 2014
Supersedes: New Date: New

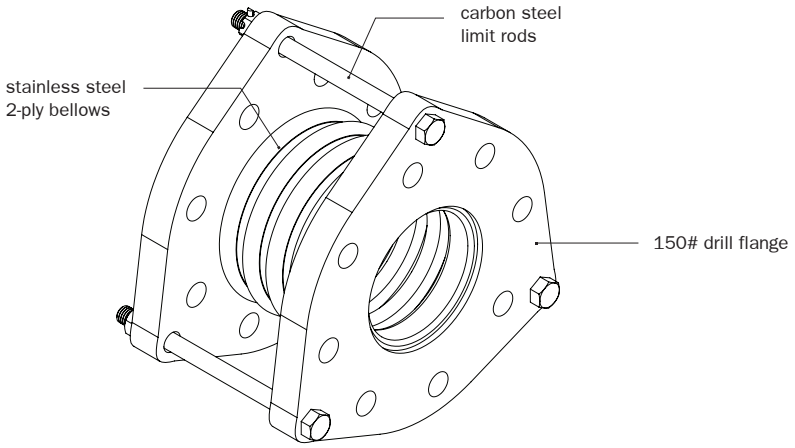

PERFORMANCE AND DIMENSIONS

Model	Nominal Size		Overall Length		Deflections			Working Pressure		Weight	
					Lateral	Axial	Axial	70°F	360°F		
	in	mm	in	mm	in	in	in	psi	psi	lbs	kg
EJM-2	2	50	4 3/8	111	1/8	1/8	1/2	225	210	20	9
EJM-2.50	2 1/2	65	4 3/8	111	1/8	1/8	1/2	225	210	24	11
EJM-3	3	80	4 3/8	111	1/8	1/8	1/2	225	210	26	12
EJM-4	4	100	4 5/8	117	1/8	1/8	1/2	225	210	35	16
EJM-5	5	125	4 7/8	124	1/8	1/8	1/2	225	210	40	18
EJM-6	6	150	5	127	1/8	1/8	1/2	225	210	46	21
EJM-8	8	200	5 7/8	149	1/8	1/8	1/2	225	210	73	33
EJM-10	10	250	6 1/4	159	1/8	1/8	1/2	225	210	94	43
EJM-12	12	300	6 5/8	168	1/8	1/8	1/2	225	210	157	71
EJM-14	14	350	9 1/2	241	1/8	1/8	1/2	225	210	247	112
EJM-16	16	400	10	254	1/8	1/8	1/2	225	210	251	114
EJMR-2	2	50	6	152	1/8	3/8	1	225	210	21	10
EJMR-2.50	2 1/2	65	6	152	1/8	3/8	1	225	210	25	11
EJMR-3	3	80	6	152	1/8	3/8	1	225	210	27	12
EJMR-4	4	100	6	152	1/8	3/8	1	225	210	36	16
EJMR-5	5	125	6	152	1/8	3/8	1	225	210	41	19
EJMR-6	6	150	6	152	1/8	3/8	1	225	210	47	21
EJMR-8	8	200	6	152	1/8	3/8	1	225	210	74	34
EJMR-10	10	250	8	203	5/16	3/8	1	225	210	99	45
EJMR-12	12	300	8	203	5/16	3/8	1	225	210	163	74
EJMR-14	14	350	8	203	5/16	3/8	1	225	210	249	113
EJMR-16	16	400	8	203	5/16	3/8	1	225	210	243	110

NOTES

- For proper operation of the expansion joint, all piping must be adequately anchored and guided.
- EJMR has the same overall length as EJN1 and ENE1.

Project:	**Model:** QTY of sets required:
Customer:	DWN: CHK: REV: DATE:
Consultant:	TAG: UNIT:
V-A Project No.:	COMMENTS:
V-A Project Manager:	