VIBRO-ACOUSTICS®
A Swegon Group company

MEMBER VISCMA

tel: 416-291-7371 1-800-565-8401
fax: 416-291-8049 1-888-811-2264
web: www.vibro-acoustics.com
eml: info@vibro-acoustics.com

L-Shaped Reinforced Concrete Inertia Base

LCIB

File No.: DS-LCIB-002 Date: 26 Sep 2013
Supersedes: DS-LCIB-001 Date: 17 May 2013

STANDARD OPTIONS (not shown in diagram)

- ☐ Motor slide rail support
- ☐ Equipment bolting template
- ☐ 18 GA bottom liner
- ☐ Special finish
  - ☐ Hot-dip galvanized
  - ☐ Epoxy paint
  - ☐ Enamel paint

L-Shaped base shown for left-hand rotation pump. The right-hand rotation bases are also available.

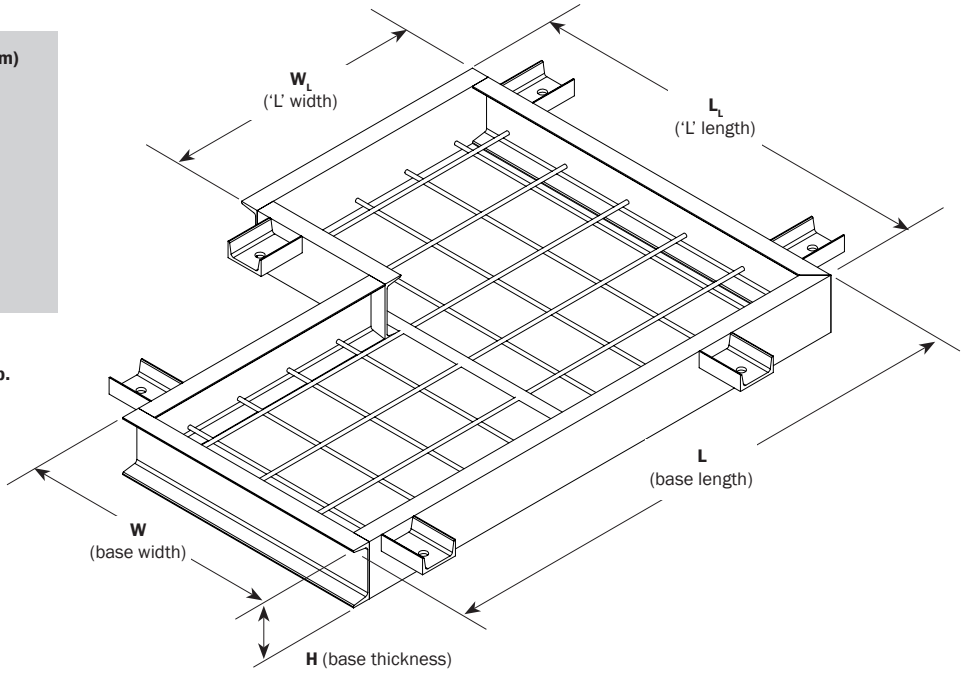

Base Thickness in	(mm)	Flange Width in	(mm)
6″	(152)	1 7/8	(48)
8″	(203)	2 1/4	(57)
10″	(254)	2 5/8	(67)
12″	(305)	3	(76)

Custom base thicknesses available upon request

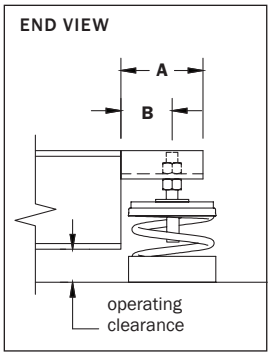

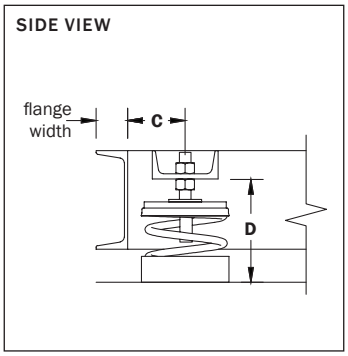

Corner bracket shown with FS isolator. See the table on the right for standard dimensions for different isolators.

Isolator	Base Thickness (inches)	DIMENSIONS Operating Clearance in (mm)	A in (mm)	B in (mm)	C in (mm)	D in (mm)
FS-SA	6″, 8″, 10″, 12″	1 1/2 (38)	3 1/2 (89)	2 1/8 (54)	3 (76)	5 (127)
FS-1A	6″	2 (51)	5 1/2 (140)	3 5/8 (92)	3 1/2 (89)	6 1/4 (159)
	8″, 10″, 12"	1 1/2 (38)				6 1/2 (165)
FS-2A	6″	2 (51)	5 1/2 (140)	3 5/8 (92)	3 1/2 (89)	8 (203)
	8″, 10″, 12″					7 7/8 (200)
FS-3A	6″, 8″	3 (76)	5 1/2 (140)	3 5/8 (92)	3 1/2 (89)	9 (229)
	10″, 12″					9 3/4 (248)
SFS-2N	6″, 8″, 10″, 12″	2 1/2 (64)	5 1/2 (140)	3 5/8 (92)	3 1/2 (89)	8 1/2 (216)
SFS-SA	6″, 8″, 10″, 12″	2 (51)	3 1/2 (89)	2 1/8 (54)	3 (76)	6 1/2 (165)
SFS-1A SFS-2A	8″, 10″, 12″	2 1/2 (64)	7 1/4 (184)	5 3/8 (136)	5 (127)	8 3/4 (222)

Equipment			Base Dimensions and Weight				Isolation	
Manufacturer	Model	Operating Weight (lb)	L (in)	W (in)	H (in)	Base Weight (lb)	Isolator Nominal Deflection (in)	Total Operating Weight (lb)
			L_L (in)	W_L (in)				

Project:			plan view of mount locations	1: 6:
Customer:				2: 7:
Consultant:				3: 8:
Dwg No.:	Rev:	Drawn by:		4: 9:
V-A Project Manager:				5: 10:
				QTY of sets required:
TAG:			EQUIPMENT:	
COMMENTS:				DATE:

This datasheet is not intended for final submittal purposes