VIBRO-ACOUSTICS®

Member VISCMA

Noise Control | Vibration Isolation | Restraint Systems

tel: 416-291-7371 1-800-565-8401
fax: 416-291-8049 1-888-811-2264

web: www.vibro-acoustics.com
eml: info@vibro-acoustics.com

GW Grommet Washers

GW

File No.: DS-GW-001 Date: 29 Jul 2011
Supersedes: New Date: New

model shown with cut-away

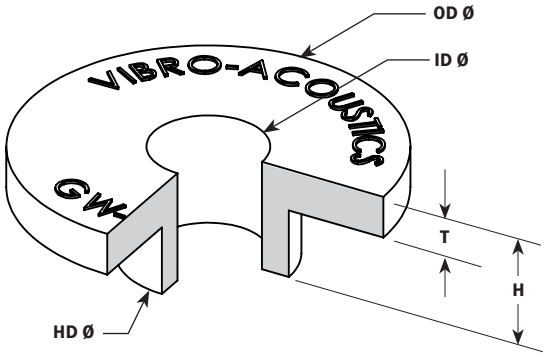

DIMENSIONS

Model	ID		HD		OD		T		H	
	in	mm	in	mm	in	mm	in	mm	in	mm
GW-38	3/8	10	5/8	16	1 1/4	32	3/16	5	1/2	13
GW-50	1/2	13	3/4	19	1 5/8	41	3/16	5	1/2	13
GW-63	5/8	16	7/8	22	2	51	1/4	6	5/8	16

NOTES

- Material is high durometer neoprene
- Use with bolt/rod diameter that matches ID dimension

TYPICAL APPLICATIONS

GW grommet washers are included standard wtih SRB seismic restraint brackets and SIPS seismic inline pump stands but can be used independently in similar situations to eliminate metal-to-metal contact between the anchor bolt and equipment supports.

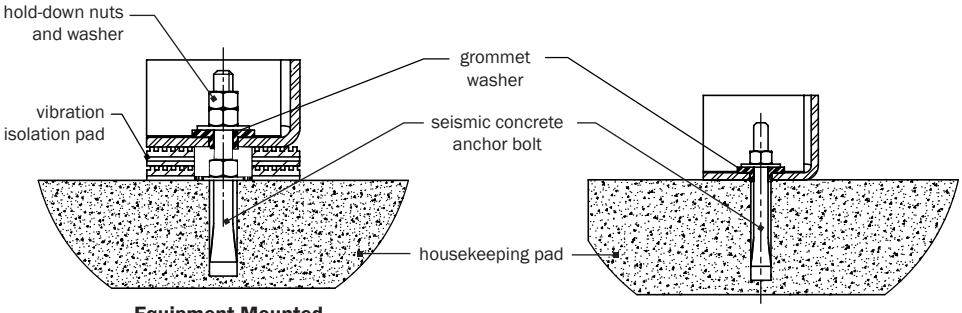

Equipment Mounted on Pad Isolators

Rigidly Mounted Equipment

GW grommet washers can provide a nominal amount of vibration control when used on suspended components.

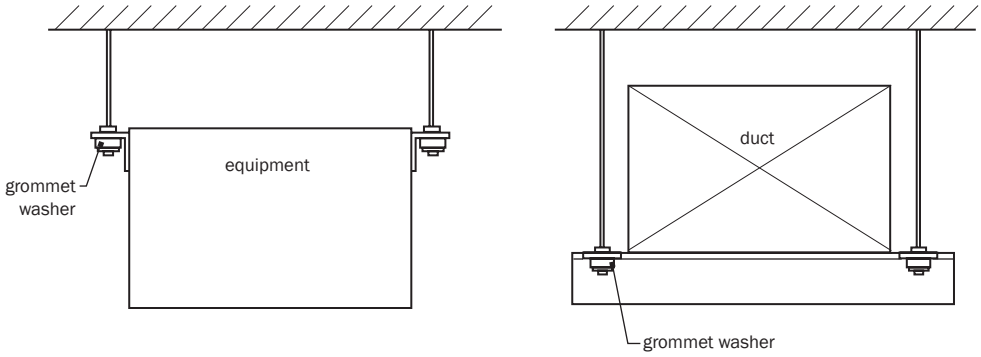

Project:			plan view of locations	1:	6:
Customer:				2:	7:
Consultant:				3:	8:
Dwg No.:	**Rev:**	**Drawn by:**		4:	9:
V-A Project Manager:				5:	10:
				QTY required:	
TAG:			EQUIPMENT:		
COMMENTS:					DATE: