VIBRO-ACOUSTICS®
A Swegon Group company

MEMBER VISCMA

tel: 416-291-7371 1-800-565-8401
fax: 416-291-8049 1-888-811-2264
web: www.vibro-acoustics.com
eml: info@vibro-acoustics.com

FCSS Stainless Steel Flexible Connectors (pg. 1 of 2)

FCSS-FL FCSS-SM

File No.: FCSS-001 Date: 30 Oct 2014
Supersedes: New Date: New

FCSS-FL

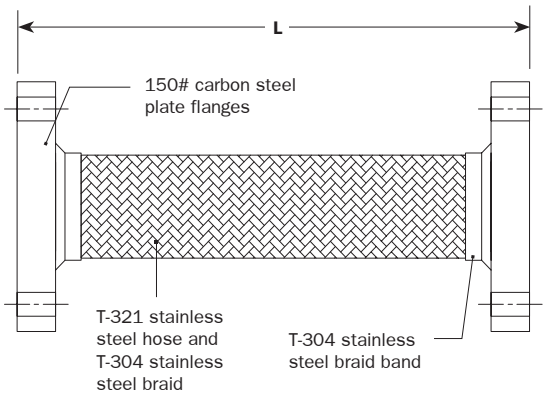

FCSS-SM

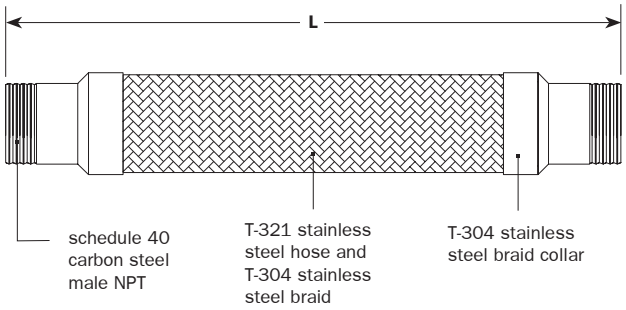

PERFORMANCE AND DIMENSIONS

Model	Nominal Size		"L" Overall Length		Lateral Offset		Working Pressure @ 70°F
	in	mm	in	mm	in	mm	psi
FCSS-1.50-FL	1 1/2	40	9	229	1/16	1.6	535
FCSS-2-FL	2	50	9	229	1/16	1.6	535
FCSS-2.50-FL	2 1/2	65	9	229	1/16	1.6	400
FCSS-3-FL	3	80	9	229	1/16	1.6	288
FCSS-4-FL	4	100	9	229	1/16	1.6	250
FCSS-5-FL	5	125	11	279	1/16	1.6	200
FCSS-6-FL	6	150	11	279	1/16	1.6	175
FCSS-8-FL	8	200	12	305	1/16	1.6	212
FCSS-10-FL	10	250	13	330	1/16	1.6	175
FCSS-12-FL	12	300	14	356	1/16	1.6	160
FCSS-14-FL	14	350	14	356	1/16	1.6	110
FCSS-16-FL	16	400	14	356	1/16	1.6	110
FCSS-0.25-SM	1/4	8	6	152	1/16	1.6	2240
FCSS-0.38-SM	3/8	10	10	254	1/16	1.6	1100
FCSS-0.50-SM	1/2	15	6 1/2	165	1/16	1.6	796
FCSS-0.75-SM	3/4	20	7	178	1/16	1.6	597
FCSS-1-SM	1	25	8	203	1/16	1.6	455
FCSS-1.25-SM	1 1/4	32	8 1/4	210	1/16	1.6	441
FCSS-1.50-SM	1 1/2	40	9	229	1/16	1.6	370
FCSS-2-SM	2	50	10 1/2	267	1/16	1.6	370
FCSS-2.50-SM	2 1/2	65	12	305	1/16	1.6	400
FCSS-3-SM	3	80	12	305	1/16	1.6	288
FCSS-4-SM	4	100	14	356	1/16	1.6	250
FCSS-5-SM	5	125	16	406	1/16	1.6	200
FCSS-6-SM	6	150	16	406	1/16	1.6	175

TEMPERATURE DERATING FACTORS

Temperature °F	Multiplier				
	FL	SM	SW	GR	GRFL
150	-	-	0.92	-	-
200	0.94	0.94	0.89	0.94	0.94
250	0.92	0.92	0.86	0.92	0.92
300	0.88	0.88	0.83	0.88	0.88
350	0.86	0.86	0.81	0.86	0.86
400	0.83	0.83	0.78	0.83	0.83
500	0.78	0.78	0.75	0.78	0.78
600	0.74	0.74	-	0.74	0.74
700	0.70	0.70	-	0.70	0.70

NOTES

- Standard End Fittings:
  FL: Carbon Steel Plate Flanges 150# Drill
  SM: Sch. 40 Carbon Steel Male NPT Ends
- 3/4″ offset available as standard upon request. Dimensions may vary.
- Contact Vibro-Acoustics for other size, and custom style requirements
- See "Temperature Derating Factors Chart" for pressure derating multipliers by temperature. Apply multiplier to the working pressure to calculate the operating pressure at the corresponding temperature. i.e. working pressure for FCSS-1-SM at 200°F is 0.94 × 455 psi = 428 psi
- Flexible connectors with higher pressure ratings can be custom built with additional braid layers.

Project:	Model: QTY of sets required:
Customer:	DWN: CHK: REV: DATE:
Consultant:	TAG: UNIT:
V-A Project No.:	COMMENTS:
V-A Project Manager:	

VIBRO-ACOUSTICS®
A Swegon Group company

MEMBER VISCMA

tel: 416-291-7371 1-800-565-8401
fax: 416-291-8049 1-888-811-2264
web: www.vibro-acoustics.com
eml: info@vibro-acoustics.com

FCSS Stainless Steel Flexible Connectors (pg. 2 of 2)

FCSS-SW
FCSS-GR
FCSS-GRFL

File No.: FCSS-001 Date: 30 Oct 2014
Supersedes: New Date: New

FCSS-SW

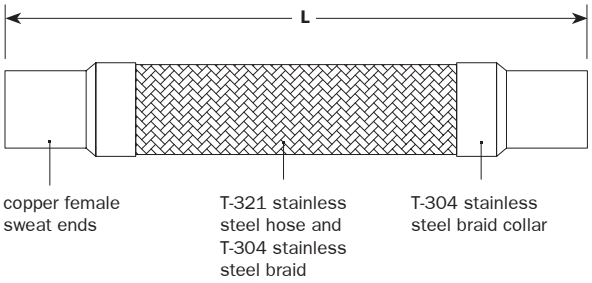

FCSS-GR

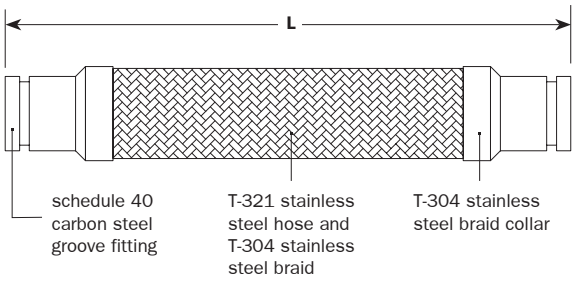

FCSS-GRFL

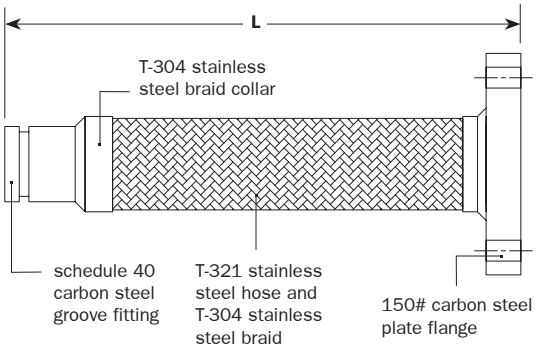

PERFORMANCE AND DIMENSIONS

Model	Nominal Size		"L" Overall Length		Lateral Offset		Working Pressure @ 70°F
	in	mm	in	mm	in	mm	psi
FCSS-0.25-SW	1/4	8	6	152	1/16	1.6	912
FCSS-0.38-SW	3/8	10	6	152	1/16	1.6	779
FCSS-0.50-SW	1/2	15	6 1/2	165	1/16	1.6	722
FCSS-0.75-SW	3/4	20	7	178	1/16	1.6	582
FCSS-1-SW	1	25	8	203	1/16	1.6	494
FCSS-1.25-SW	1 1/4	32	8 1/2	216	1/16	1.6	439
FCSS-1.50-SW	1 1/2	40	9	229	1/16	1.6	408
FCSS-2-SW	2	50	10 1/2	267	1/16	1.6	364
FCSS-2.50-SW	2 1/2	65	12	305	1/16	1.6	336
FCSS-3-SW	3	80	12	305	1/16	1.6	317
FCSS-4-SW	4	100	12	305	1/16	1.6	293
FCSS-2-GR	2	50	12	305	3/8	9.5	370
FCSS-2.50-GR	2 1/2	65	14	356	3/8	9.5	400
FCSS-3-GR	3	80	14	356	3/8	9.5	288
FCSS-4-GR	4	100	16	406	1/2	12.7	250
FCSS-5-GR	5	125	17	432	1/2	12.7	200
FCSS-6-GR	6	150	18	452	1/2	12.7	175
FCSS-8-GR	8	200	20	508	1/2	12.7	212
FCSS-10-GR	10	250	24	610	3/4	19.1	175
FCSS-12-GR	12	300	25	635	3/4	19.1	160
FCSS-2-GRFL	2	50	12	305	3/8	9.5	450
FCSS-2.50-GRFL	2 1/2	65	14	356	3/8	9.5	390
FCSS-3-GRFL	3	80	14	356	3/8	9.5	250
FCSS-4-GRFL	4	100	16	406	1/2	12.7	210
FCSS-5-GRFL	5	125	17	432	1/2	12.7	210
FCSS-6-GRFL	6	150	18	452	1/2	12.7	165
FCSS-8-GRFL	8	200	20	508	1/2	12.7	220
FCSS-10-GRFL	10	250	24	610	3/4	19.1	165
FCSS-12-GRFL	12	300	25	635	3/4	19.1	155

TEMPERATURE DERATING FACTORS

Temperature °F	Multiplier				
	FL	SM	SW	GR	GRFL
150	-	-	0.92	-	-
200	0.94	0.94	0.89	0.94	0.94
250	0.92	0.92	0.86	0.92	0.92
300	0.88	0.88	0.83	0.88	0.88
350	0.86	0.86	0.81	0.86	0.86
400	0.83	0.83	0.78	0.83	0.83
500	0.78	0.78	0.75	0.78	0.78
600	0.74	0.74	-	0.74	0.74
700	0.70	0.70	-	0.70	0.70

NOTES

- Standard End Fittings:
  SW: Copper Female Sweat Ends
  GR: Sch. 40 Carbon Steel Groove Fittings
  GRFL: One end 'GR', other end 'FL'
- 3/4″ offset available as standard upon request. Dimensions may vary.
- Contact Vibro-Acoustics for other size, and custom style requirements
- See "Temperature Derating Factors Chart" for pressure derating multipliers by temperature. Apply multiplier to the working pressure to calculate the operating pressure at the corresponding temperature. i.e. working pressure for FCSS-1-SM at 200°F is 0.94 × 455 psi = 428 psi
- Flexible connectors with higher pressure ratings can be custom built with additional braid layers.

Project:	**Model:** QTY of sets required:
Customer:	DWN: CHK: REV: DATE:
Consultant:	TAG: UNIT:
V-A Project No.:	COMMENTS:
V-A Project Manager:	