VIBRO-ACOUSTICS®
A Swegon Group company

MEMBER VISCMA

tel: 416-291-7371 1-800-565-8401
fax: 416-291-8049 1-888-811-2264
web: www.vibro-acoustics.com
eml: info@vibro-acoustics.com

1″ (25 mm) Deflection SH Spring Hangers

SH-1

File No.: DS-SH1-010 Date: 24 Feb 2016
Supersedes: DS-SH1-009 Date: 4 Dec 2014

SH-1N

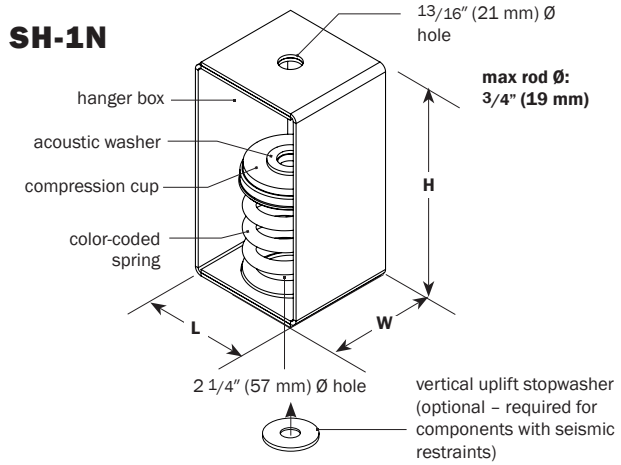

SH-1S

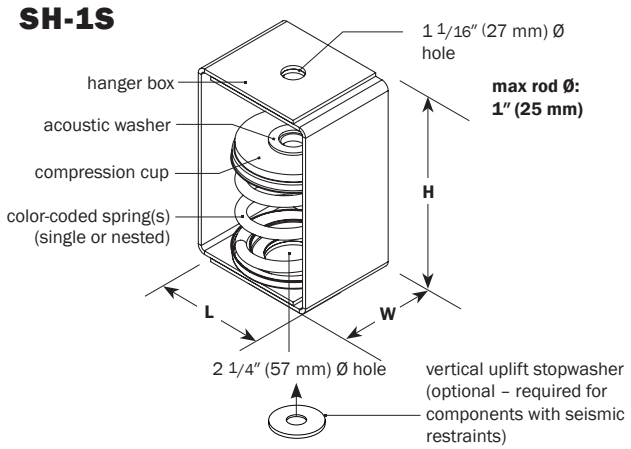

SH-1SS

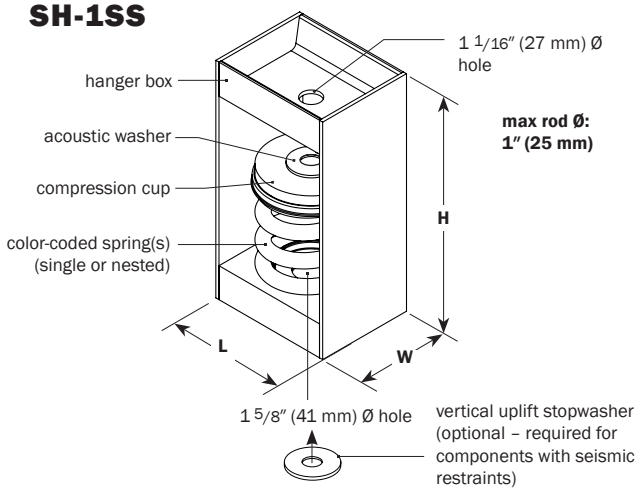

PERFORMANCE

Model	Spring Color	Rated Load		Deflection at rated load		Isolator Weight †	
	outer-inner	lb	kN	in	mm	lb	kg
SH-1N-50*	Blue	**50**	0.22	**1.0**	25	**4.9**	2.2
SH-1N-100*	White	**100**	0.44	**1.0**	25	**5.2**	2.3
SH-1N-150*	Orange	**150**	0.67	**1.0**	25	**5.2**	2.3
SH-1N-200	Grey	**200**	0.89	**1.0**	25	**5.4**	2.5
SH-1N-300	Black	**300**	1.33	**1.0**	25	**5.6**	2.5
SH-1N-400	Green	**400**	1.78	**1.0**	25	**5.6**	2.5
SH-1N-500	Yellow	**500**	2.22	**1.0**	25	**5.9**	2.7
SH-1N-600	Red	**600**	2.67	**1.0**	25	**6.0**	2.7
SH-1N-800	Blue	**800**	3.56	**1.0**	25	**6.3**	2.8
SH-1S-900	Orange-Green	**900**	4.00	**1.0**	25	**13.4**	6.1
SH-1S-1000	White	**1000**	4.45	**1.0**	25	**12.6**	5.7
SH-1S-1100	White-White	**1100**	4.89	**1.0**	25	**13.3**	6.0
SH-1S-1200	White-Grey	**1200**	5.34	**1.0**	25	**13.6**	6.2
SH-1S-1300	White-Black	**1300**	5.78	**1.0**	25	**13.7**	6.2
SH-1S-1400	White-Green	**1400**	6.23	**1.0**	25	**13.8**	6.2
SH-1S-1500	White-Yellow	**1500**	6.67	**1.0**	25	**14.1**	6.4
SH-1S-1600	White-Red	**1600**	7.12	**1.0**	25	**14.2**	6.4
SH-1S-1800	White-Blue	**1800**	8.01	**1.0**	25	**14.4**	6.5
SH-1SS-2000	Red-Yellow	**2000**	8.90	**1.0**	25	**22.1**	10.0
SH-1SS-2500	Red-Ivory	**2500**	11.12	**1.0**	25	**23.9**	10.9
SH-1SS-3000	Black-Yellow	**3000**	13.35	**1.0**	25	**24.5**	11.1
SH-1SS-3500	Black-Ivory	**3500**	15.57	**1.0**	25	**24.7**	11.2

* for smaller hanger box, see SH-SN † weights are approximate

DIMENSIONS: SH-1N

Model SH-1N	L in	L mm	W in	W mm	H in	H mm
50–800	**4 1/4**	108	**4**	102	**8 1/4**	210

DIMENSIONS: SH-1S

Model SH-1S	L in	L mm	W in	W mm	H in	H mm
900–1800	**5 1/2**	140	**4 1/2**	114	**9**	229

DIMENSIONS: SH-1SS

Model SH-1SS	L in	L mm	W in	W mm	H in	H mm
2000–3500	**6 3/4**	171	**5**	102	**12 1/4**	229

NOTES

- Spring hanger with steel spring and welded steel housing
- For 1N & 1S: Hanger is designed to allow support rod misalignment through a 30-degree arc without contacting the hanger box
- Vertical uplift stopwasher must be added on spring hangers for seismically restrained equipment, duct or piping
- Minimum 50% additional travel to solid
- Springs and housing powder coated for SH-1N & 1S
- Compression cups are zinc plated or powder coated
- SH-1SS housing is enamel painted

Project:		plan view of hanger locations	1:	6:
Customer:			2:	7:
Consultant:			3:	8:
Dwg No.:	**Rev:**	**Drawn by:**	4:	9:
V-A Project Manager:			5:	10:
			QTY of sets required:	
TAG:		EQUIPMENT:		
COMMENTS:				DATE: