VIBRO-ACOUSTICS®
A Swegon Group company

MEMBER VISCMA

tel: 416-291-7371 1-800-565-8401
fax: 416-291-8049 1-888-811-2264
web: www.vibro-acoustics.com
eml: info@vibro-acoustics.com

1″ (25 mm) Deflection PSHB Precompressed Spring Hanger with Bottom Cup

PSHB-1

File No.: DS-PSHB1-005 Date: 24 Feb 2016
Supersedes: DS-PSHB1-004 Date: 23 Jul 2012

Model shown with cut-away

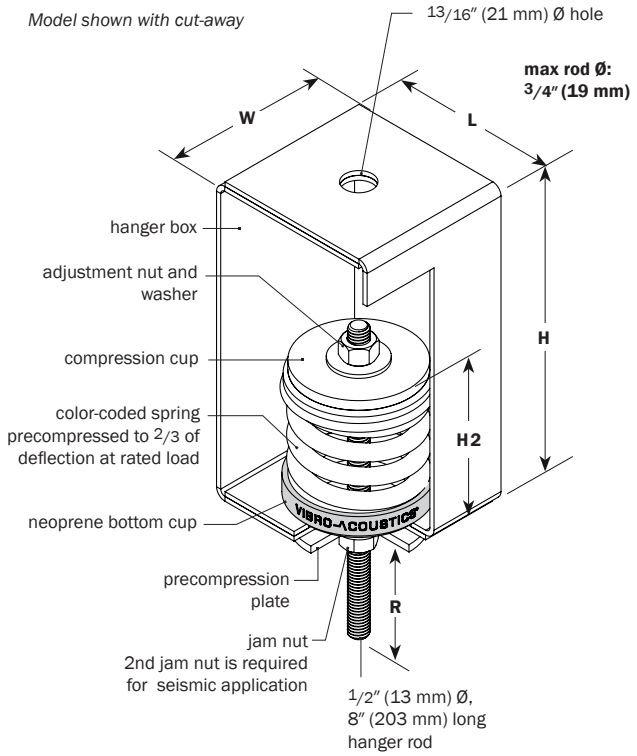

PERFORMANCE

Model	Spring Color	Rated Load		Deflection at rated load		Isolator Weight †	
		lb	kN	in	mm	lb	kg
PSHB-1N-50*	Blue	**50**	0.22	**1.0**	25	**6.3**	2.9
PSHB-1N-100*	White	**100**	0.44	**1.0**	25	**6.5**	3.0
PSHB-1N-150*	Orange	**150**	0.67	**1.0**	25	**6.5**	3.0
PSHB-1N-200*	Green	**200**	0.89	**1.0**	25	**6.7**	3.1
PSHB-1N-300	Black	**300**	1.33	**1.0**	25	**6.8**	3.1
PSHB-1N-400	Green	**400**	1.78	**1.0**	25	**7.2**	3.3
PSHB-1N-500	Yellow	**500**	2.22	**1.0**	25	**7.3**	3.3
PSHB-1N-600	Red	**600**	2.67	**1.0**	25	**7.4**	3.4
PSHB-1N-800	Blue	**800**	3.56	**1.0**	25	**7.6**	3.5
PSHB-1N-1000	Ivory	**1000**	4.45	**1.0**	25	**7.6**	3.5

* for smaller isolator, see PSHB-SN † weights are approximate

DIMENSIONS: PSHB-1N

Model	L		W		H		H2*		R	
PSHB-1N	in	mm	in	mm	in	mm	in	mm	in	mm
50–800	**4 1/4**	108	**4**	102	**8 1/4**	210	**3 3/4**	95	**3 1/2**	89

* precompressed height

NOTES

- Spring hanger with steel spring in a welded steel housing
- Spring is precompressed to 2/3 of deflection at rated load
- Spring sits in a molded neoprene cup which includes a sleeve through the bottom hole
- Hanger is designed to allow support rod misalignment through a 30-degree arc without contacting the hanger box
- Precompression plate can serve as a vertical uplift stopwasher for seismically restrained equipment, duct or piping. A second jam nut must be added to lock it in place.
- Coupling (by others) is required for attaching to support rod
- Minimum 50% additional travel to solid
- All elements are safe at solid loading
- All hardware is zinc-plated, Grade 2 minimum
- Spring and hanger box are powder-coated

Project:		plan view of hanger locations	1:	6:
Customer:			2:	7:
Consultant:			3:	8:
Dwg No.:	**Rev:**	**Drawn by:**	4:	9:
V-A Project Manager:			5:	10:
			QTY of sets required:	
TAG:		EQUIPMENT:		
COMMENTS:				DATE: