VIBRO-ACOUSTICS®
A Swegon Group company

MEMBER VISCMA

tel: 416-291-7371 1-800-565-8401
fax: 416-291-8049 1-888-811-2264
web: www.vibro-acoustics.com
eml: info@vibro-acoustics.com

1″ (25 mm) Deflection SCSR Seismic Restrained Spring Isolators (for Concrete)

SCSR-1A

For Concrete Structure

File No.: DS-SCSR1-C-012 Date: 8 Feb 2016
Supersedes: DS-SCSR1-C-011 Date: 14 Jan 2016

SCSR-1A (50–4500)

shown with cut-away

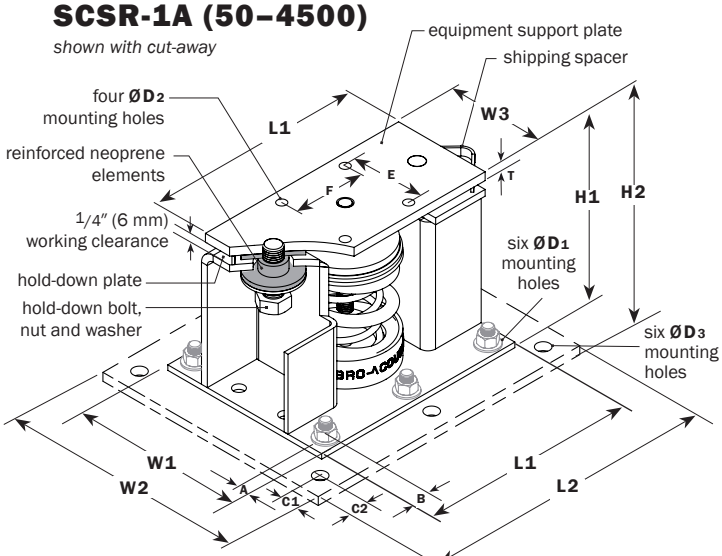

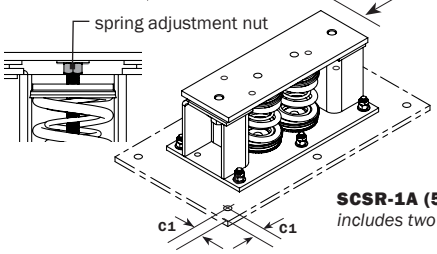

SCSR-1A (5000–9000)
includes two spring assemblies

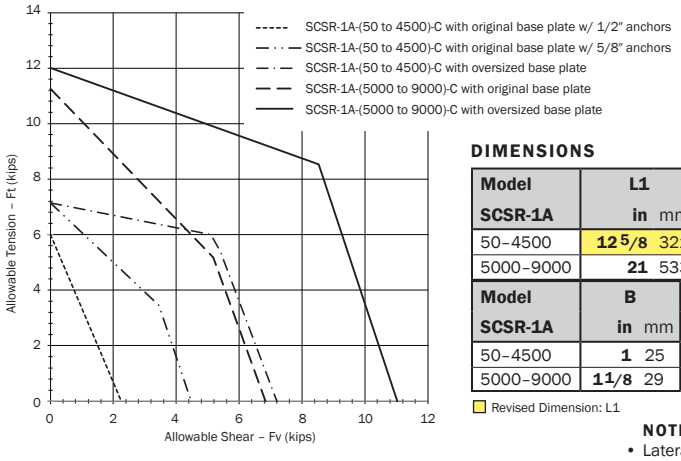

PERFORMANCE

Model	Spring Color	Rated Load		Deflection at rated load		Isolator Weight †	
	outer-inner	lb	kN	in	mm	lb	kg
SCSR-1A-50	Black	50	0.22	1.0	25	43.4	19.7
SCSR-1A-150	Black-White	150	0.67	1.0	25	44.1	20.0
SCSR-1A-200	Grey	200	0.89	1.0	25	44.1	20.0
SCSR-1A-300	Grey-White	300	1.33	1.0	25	44.7	20.3
SCSR-1A-400	Grey-Grey	400	1.78	1.0	25	44.6	20.2
SCSR-1A-500	Orange	500	2.22	1.0	25	45.3	20.5
SCSR-1A-600	Orange-White	600	2.67	1.0	25	45.9	20.8
SCSR-1A-700	Orange-Grey	700	3.11	1.0	25	45.9	20.8
SCSR-1A-800	Orange-Black	800	3.56	1.0	25	45.1	20.5
SCSR-1A-900	Orange-Green	900	4.00	1.0	25	45.8	20.8
SCSR-1A-1000	White	1000	4.45	1.0	25	46.4	21.0
SCSR-1A-1100	White-White	1100	4.89	1.0	25	46.4	21.0
SCSR-1A-1200	White-Grey	1200	5.34	1.0	25	46.6	21.1
SCSR-1A-1300	White-Black	1300	5.78	1.0	25	47.2	21.4
SCSR-1A-1400	White-Green	1400	6.23	1.0	25	47.2	21.4
SCSR-1A-1500	Red	1500	6.67	1.0	25	46.9	21.3
SCSR-1A-1600	Red-White	1600	7.12	1.0	25	46.9	21.3
SCSR-1A-1800	Red-Black	1800	8.01	1.0	25	47.3	21.5
SCSR-1A-2000	Red-Yellow	2000	8.90	1.0	25	45.1	20.5
SCSR-1A-2500	Red-Ivory	2500	11.12	1.0	25	47.2	21.4
SCSR-1A-3000	Red-White	3000	13.34	1.0	25	47.6	21.6
SCSR-1A-3500	Black-Red	3500	15.57	1.0	25	47.8	21.7
SCSR-1A-3800	Black-Blue	3800	16.90	1.0	25	47.8	21.7
SCSR-1A-4000	Black-Ivory	4000	17.80	1.0	25	48.4	22.0
SCSR-1A-4500	Black-White	4500	20.02	1.0	25	49.0	22.2
SCSR-1A-5000	(2) Red-Ivory	5000	22.24	1.0	25	87.0	39.5
SCSR-1A-6000	(2) Red-White	6000	26.69	1.0	25	88.0	39.9
SCSR-1A-6600	(2) Black-Black	6600	29.36	1.0	25	88.0	39.9
SCSR-1A-7000	(2) Black-Yellow	7000	31.14	1.0	25	89.0	40.3
SCSR-1A-7600	(2) Black-Blue	7600	33.81	1.0	25	89.0	40.3
SCSR-1A-8000	(2) Black-Ivory	8000	35.59	1.0	25	90.0	40.8
SCSR-1A-9000	(2) Black-White	9000	40.03	1.0	25	92.0	41.7

For higher capacities, contact Vibro-Acoustics' factory
† weights approximated (oversized base plate for 50–4500 is 32 lb., 5000–9000 is 73 lb)

DIMENSIONS

Model	L1		L2		A		W1		W2		W3		H1		H2		T	
SCSR-1A	in	mm	in	mm	in	mm	in	mm	in	mm	in	mm	in	mm	in	mm	in	mm
50–4500	12 5/8	321	17	432	3/4	19	10	254	14	356	5 5/8	143	9	229	9 1/2	241	1/2	13
5000–9000	21	533	30 1/2	775	1 1/8	29	11	279	17	432	7	178	9	229	9 1/2	241	1/2	13

Model	B		C1		C2		E		F		ØD1		ØD2		ØD3	
SCSR-1A	in	mm	in	mm	in	mm	in	mm	in	mm	in	mm	in	mm	in	mm
50–4500	1	25	1 1/8	29	1 1/4	32	4 1/8	105	4 1/8	105	11/16	17	9/16	14	13/16	21
5000–9000	1 1/8	29	1 3/4	44	1 3/4	44	4 1/2	114	10 1/2	267	11/16	17	11/16	17	7/8	22

Revised Dimension: L1

For attachment to concrete structure:

1. SCSR-1A-(50 to 4500)-C loads are based on using (6) 1/2″ hilti kb tz @ 2″ emb. 12″ edge distance, 4″ thick 3000 psi cracked concrete
2. SCSR-1A-(50 to 4500)-C loads are based on using (6) 5/8″ hilti kb tz @ 4″ emb. 12″ edge distance, 6″ thick 3000 psi cracked concrete
3. SCSR-1A-(50 to 4500)-C loads with oversized base plate are based on using (6) 3/4″ hilti kb tz @ 4-3/4″ emb. 10″ edge distance, 8″ thick 3000 psi cracked concrete
4. SCSR-1A-(5000 to 9000)-C loads are based on using (6) 5/8″ hilti kb tz @ 4″ emb. 12″ edge distance, 8″ thick 4000 psi cracked concrete
5. SCSR-1A-(5000 to 9000)-C loads with oversized base plate are based on using (6) 3/4″ hilti kb tz @ 4-3/4″ emb. 14″ edge distance, 8″ thick 4000 psi cracked concrete
6. SCSR ratings for concrete are determined in accordance with ACI 318-11

NOTES

- Laterally and vertically restrained spring type isolators with housings and heavy top plates for equipment support
- Welded steel construction housings with vertically restraining limit stops
- Top plate and restraining bolts are designed to be out of contact with housing during normal operation
- Reinforced neoprene elements (snubbers) are incorporated to minimize short-circuiting of restraining bolts
- Minimum 50% additional travel to solid
- Minimum k_x/k_y ratio of 0.8
- Housing is powder-coated; hot-dipped galvanizing is optional
- All components are painted, plated, or coated for outdoor applications
- If less than 80% of the top plate is covered by the supported equipment, use an additional plate (same thickness as the isolator's equipment support plate) on top of the isolator. See installation instructions.
- All springs are powder-coated
- Springs supported with neoprene cups for noise isolation

OPTIONS ☐ HOT-DIP GALVANIZED ☐ OVERSIZED BASE PLATE

Project:		
Customer:		
Consultant:		
Dwg No.:	Rev:	Drawn by:
V-A Project Manager:		

plan view of mount locations

1:	6:
2:	7:
3:	8:
4:	9:
5:	10:
QTY of sets required:	

TAG: EQUIPMENT:

COMMENTS: DATE: