VIBRO-ACOUSTICS®
A Swegon Group company
MEMBER VISCMA

tel: 416-291-7371 1-800-565-8401
fax: 416-291-8049 1-888-811-2264
web: www.vibro-acoustics.com
eml: info@vibro-acoustics.com

N Vibration Isolation Pads

N

File No.: DS-N-013 Date: 21 June 2016
Supersedes: DS-N-012 Date: 4 May 2016

N PAD

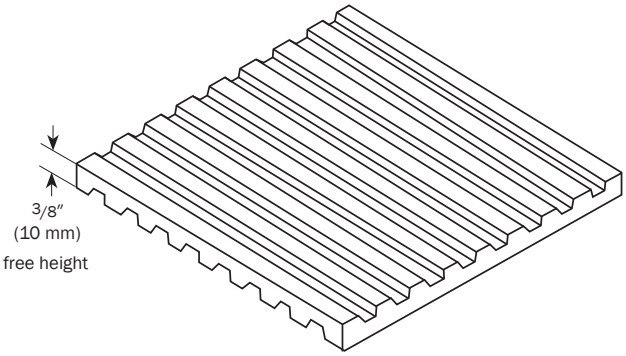

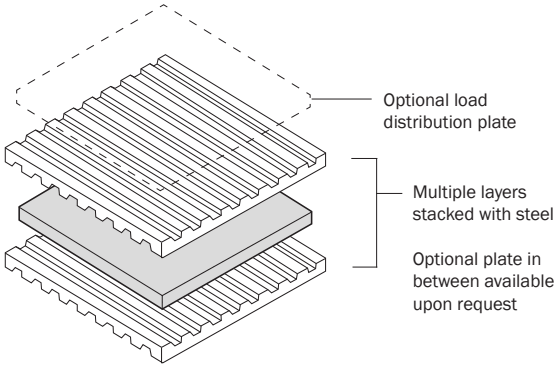

PERFORMANCE (N)

Model	Design Load Capacity @ .07 in (2 mm) Deflection		Standard Size other sizes available		Pad Weight †	
	lb	kN	**in**	mm	**lb**	kg
N 22	**180**	0.79	**2×2**	50×50	**0.04**	0.02
N 33	**400**	1.80	**3×3**	80×80	**0.10**	0.04
N 44	**720**	3.20	**4×4**	100×100	**0.17**	0.08
N 55	**1125**	4.90	**5×5**	130×130	**0.27**	0.12
N 66	**1620**	3.20	**6×6**	150×150	**0.38**	0.17
N 69	**2430**	6.30	**6×9**	150×230	**0.57**	0.26
N 912	**4860**	4.90	**9×12**	230×300	**1.15**	0.52
N 918	**7290**	9.90	**9×18**	230×460	**1.72**	0.78
N 1818	**14580**	7.10	**18×18**	460×460	**3.44**	1.56

† weights are approximate

N Pad Type	Min. Load & Deflection	Design Load & Deflection	Max. Load & Deflection
45 DURO	25 PSI (0.11 kN)	45 PSI (0.20 kN)	60 PSI (0.26 kN)
	0.05″ (1 mm)	0.07″ (2 mm)	0.09″ (2 mm)

LOAD RANGE

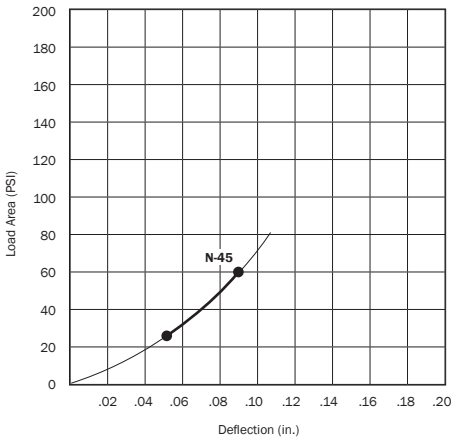

NOTES

Type N: Neoprene pad type, 3/8″ (10 mm) thick, ribbed on both sides.

Type SN: Optional steel load distribution plate on N pad.

Type NSN: Sandwich neoprene pad type, with 3/8″ thick, ribbed pads on both sides of a galvanized steel plate. See Neo Plus datasheet for higher deflections.

Project:		
Customer:		
Consultant:		
Dwg No.:	**Rev:**	**Drawn by:**
V-A Project Manager:		
TAG:		
DATE:		
COMMENTS:		

plan view of pad locations

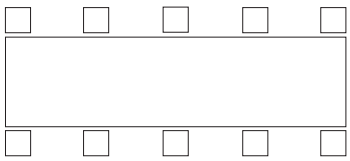

Unless otherwise specified, install pads equally spaced along the long sides of the equipment.

1:	6:
2:	7:
3:	8:
4:	9:
5:	10:
QTY of sets required:	

EQUIPMENT: