VIBRO-ACOUSTICS®
A Swegon Group company

MEMBER VISCMA

tel: 416-291-7371 1-800-565-8401
fax: 416-291-8049 1-888-811-2264
web: www.vibro-acoustics.com
eml: info@vibro-acoustics.com

SIPS Seismic Inline Pump Stands

U.S. Design Patent No. D,699,549 S

SIPS

File No.: DS-SIPS-0016 Date: 6 July 2016
Supersedes: DS-SIPS-015 Date: 21 June 2016

SIPS-1.5/2/2.5/3

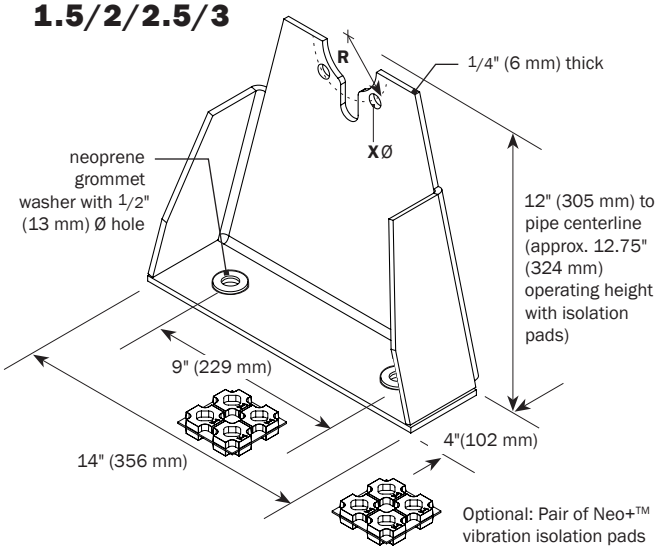

SIPS-4/5/6/8

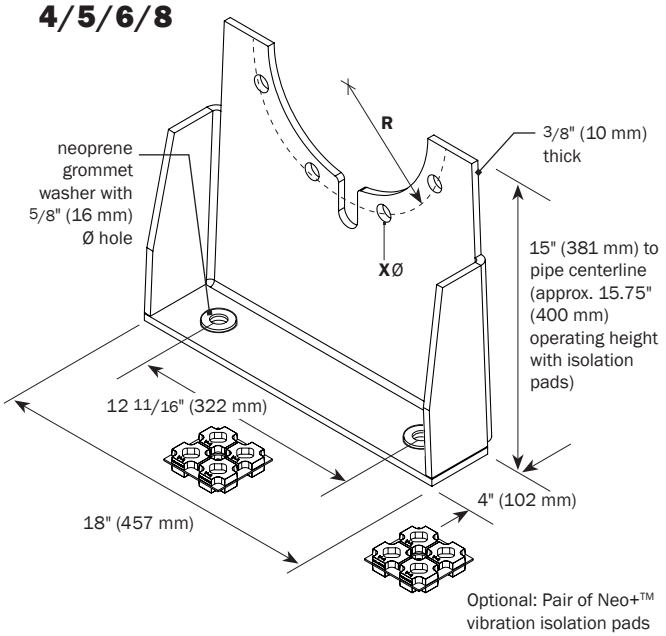

DIMENSIONS

Model	Nominal Pipe Size (in)	Nominal Pipe Size (mm)	R Radius of Bolt Hole Centers (in)	R (mm)	X Bolt Hole Diameter (in)	X (mm)	Stand Weight (lb)	Stand Weight (kg)	Optional Neo+ pad Sizes
SIPS-1.5	1 1/2	40	1 15/16	49	5/8	16	16.2	7.3	Black 4×4
SIPS-2	2	50	2 3/8	60	3/4	19	16.4	7.4	Black 4×4
SIPS-2.5	2 1/2	65	2 3/4	70	3/4	19	16.6	7.5	Black 4×4
SIPS-3	3	80	3	76	3/4	19	16.9	7.7	Black 4×4
SIPS-4	4	100	3 3/4	95	3/4	19	36.0	16.3	Black 4×4
SIPS-5	5	125	4 1/4	108	7/8	22	36.1	16.4	Black 4×4
SIPS-6	6	150	4 3/4	121	7/8	22	36.3	16.5	Black 4×4
SIPS-8	8	200	5 7/8	149	7/8	22	36.4	16.5	Black 4×4

NOTCH DIMENSIONS

Model	N1 Width (in)	N1 (mm)	N2 Length (in)	N2 (mm)
SIPS-1.5	0.94	24	2.94	75
SIPS-2	1.06	27	3.50	89
SIPS-2.5	1.06	27	4.00	102
SIPS-3	1.06	27	4.25	108
SIPS-4	1.06	27	5.00	127
SIPS-5	1.19	30	5.56	141
SIPS-6	1.19	30	6.06	154
SIPS-8	1.19	30	7.31	186

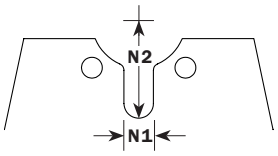

PERFORMANCE

Model	Max Allowed Lateral Load without Neo+ Pads* (lb)	(kg)	Max Allowed Lateral Load with Neo+ Pads* (lb)	(kg)
SIPS-1.5/2/2.5/3	900	408	700	318
SIPS-4/5/6/8	2600	1179	2000	907

* Max allowed load requires correct attachment to structure

NOTES

- Pump stands are designed for minimum 1g lateral seismic load for most matching inline pumps. An analysis must be performed to ensure adequacy for project- specific conditions
- Stands are fabricated with high strength low alloy steel
- Bolt holes located to match ANSI 125 cast iron flange dimensions
- Pump stands are powder-coated enamel for corrosion protection
- Cutouts are sized to accommodate standard class 150 slip-on flanges
- Pump stands must be installed in pairs on inline pumps. See installation instructions for further information
- If mounted on a housekeeping pad, the housekeeping pad must be seismically doweled to the structural slab

OPTION ☐ VIBRATION ISOLATION PADS

Project:		
Customer:		
Consultant:		
Dwg No.:	Rev:	Drawn by:
V-A Project Manager:		

plan view of stand locations

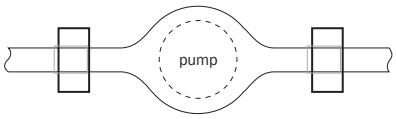

Model
SIPS-

TAG:

EQUIPMENT:

COMMENTS:

DATE: