VIBRO-ACOUSTICS®
A Swegon Group company

MEMBER VISCMA

tel: 416-291-7371 1-800-565-8401
fax: 416-291-8049 1-888-811-2264
web: www.vibro-acoustics.com
eml: info@vibro-acoustics.com

EJE1/EJN1 Single Sphere Flanged Expansion Joint

EJE1 EJN1

File No.: EJEEJN-1-001 Date: 30 Oct 2014
Supersedes: New Date: New

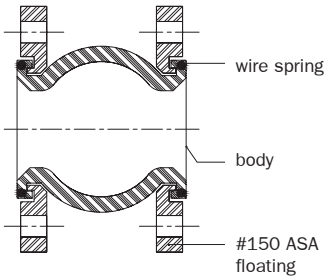

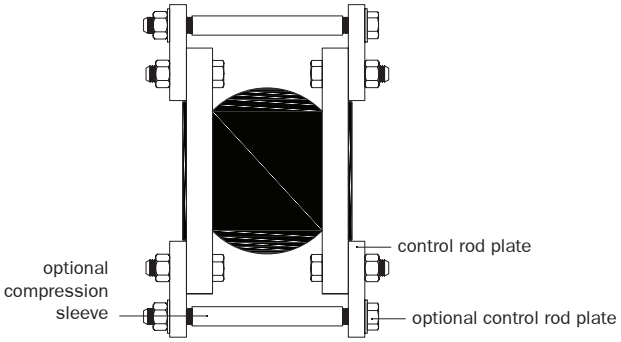

PERFORMANCE AND DIMENSIONS

Model	Body Constr.	Nominal Size		"L" Length Face to Face		Deflections				Working Pressure		Max. Temp.
						Lateral	Axial Ext.	Axial Comp.	Angular	w/o control rod	w/ control rod *	
		in	mm	in	mm	in	in	in	deg	psi	psi	°F
EJE1-1.50	EPDM	**1.5**	40	**6**	152	±1/2	3/8	1/2	**27**	**179**	**225**	**250**
EJE1-2	EPDM	**2**	50	**6**	152	±1/2	3/8	1/2	**20**	**179**	**225**	**250**
EJE1-2.50	EPDM	**2.5**	65	**6**	152	±1/2	3/8	1/2	**17**	**179**	**225**	**250**
EJE1-3	EPDM	**3**	80	**6**	152	±1/2	3/8	1/2	**14**	**179**	**225**	**250**
EJE1-4	EPDM	**4**	100	**6**	152	±1/2	1/2	3/4	**14**	**179**	**225**	**250**
EJE1-5	EPDM	**5**	125	**6**	152	±1/2	1/2	3/4	**11**	**134**	**225**	**250**
EJE1-6	EPDM	**6**	150	**6**	152	±1/2	1/2	3/4	**9**	**134**	**225**	**250**
EJE1-8	EPDM	**8**	200	**6**	152	±1/2	1/2	3/4	**7**	**134**	**225**	**250**
EJE1-10	EPDM	**10**	250	**8**	203	±3/4	3/4	**1**	**7**	**134**	**225**	**250**
EJE1-12	EPDM	**12**	300	**8**	203	±3/4	3/4	**1**	**6**	**89**	**225**	**250**
EJE1-14	EPDM	**14**	350	**8**	203	±3/4	3/4	**1**	**5**	**89**	**150**	**250**
EJE1-16	EPDM	**16**	400	**8**	203	±3/4	3/4	**1**	**4**	**44**	**125**	**250**
EJE1-18	EPDM	**18**	450	**8**	203	±3/4	3/4	**1**	**4**	**44**	**125**	**250**
EJE1-20	EPDM	**20**	500	**8**	203	±3/4	3/4	**1**	**3**	**44**	**125**	**250**
EJE1-24	EPDM	**24**	600	**10**	254	±3/4	3/4	**1**	**3**	**44**	**110**	**250**
EJN1-1.50	Neoprene	**1.5**	40	**6**	152	±1/2	3/8	1/2	**27**	**179**	**225**	**230**
EJN1-2	Neoprene	**2**	50	**6**	152	±1/2	3/8	1/2	**20**	**179**	**225**	**230**
EJN1-2.50	Neoprene	**2.5**	65	**6**	152	±1/2	3/8	1/2	**17**	**179**	**225**	**230**
EJN1-3	Neoprene	**3**	80	**6**	152	±1/2	3/8	1/2	**14**	**179**	**225**	**230**
EJN1-4	Neoprene	**4**	100	**6**	152	±1/2	1/2	3/4	**14**	**179**	**225**	**230**
EJN1-5	Neoprene	**5**	125	**6**	152	±1/2	1/2	3/4	**11**	**134**	**225**	**230**
EJN1-6	Neoprene	**6**	150	**6**	152	±1/2	1/2	3/4	**9**	**134**	**225**	**230**
EJN1-8	Neoprene	**8**	200	**6**	152	±1/2	1/2	3/4	**7**	**134**	**225**	**230**
EJN1-10	Neoprene	**10**	250	**8**	203	±3/4	3/4	**1**	**7**	**134**	**225**	**230**
EJN1-12	Neoprene	**12**	300	**8**	203	±3/4	3/4	**1**	**6**	**89**	**225**	**230**
EJN1-14	Neoprene	**14**	350	**8**	203	±3/4	3/4	**1**	**5**	**89**	**150**	**230**
EJN1-16	Neoprene	**16**	400	**8**	203	±3/4	3/4	**1**	**4**	**44**	**125**	**230**
EJN1-18	Neoprene	**18**	450	**8**	203	±3/4	3/4	**1**	**4**	**44**	**125**	**230**
EJN1-20	Neoprene	**20**	500	**8**	203	±3/4	3/4	**1**	**3**	**44**	**125**	**230**
EJN1-24	Neoprene	**24**	600	**10**	254	±3/4	3/4	**1**	**3**	**44**	**110**	**230**

NOTES

- Maximum negative pressure is 26″ HG vacuum
- Temperature range: 20°F – 300°F
- Listed movements cannot occur simultaneously
- 3:1 safety factor (burst to operating pressure)
- Contact factory for stainless steel #150 and carbon steel #300 flanges
- Contact factory for other elastomer requirements for the molded body construction
- Metal reinforcement can be provided to accommodate extreme piping system stress
- Standard and custom sized nominal diameter, overall lengths including reducer expansion joints are available

* Control rods are used for achieving these pressure ratings. Control rods are also required for unanchored systems. Suffix "-CR" is added to the model names for control rod, i.e: EJN1-12-CR

Project:	**Model:** **QTY of sets required:**
Customer:	DWN: CHK: REV: DATE:
Consultant:	TAG: UNIT:
V-A Project No.:	COMMENTS:
V-A Project Manager:	