VIBRO-ACOUSTICS®
A Swegon Group company
MEMBER VISCMA

tel: 416-291-7371 1-800-565-8401
fax: 416-291-8049 1-888-811-2264
web: www.vibro-acoustics.com
eml: info@vibro-acoustics.com

3″ (76 mm) Deflection CSR Restrained Spring Isolators

CSR-3

File No.: DS-CSR3-013 Date: 2 Nov 2016
Supersedes: DS-CSR3-012 Date: 15 Apr 2014

CSR-3A (50–4100)

shown with cut-away

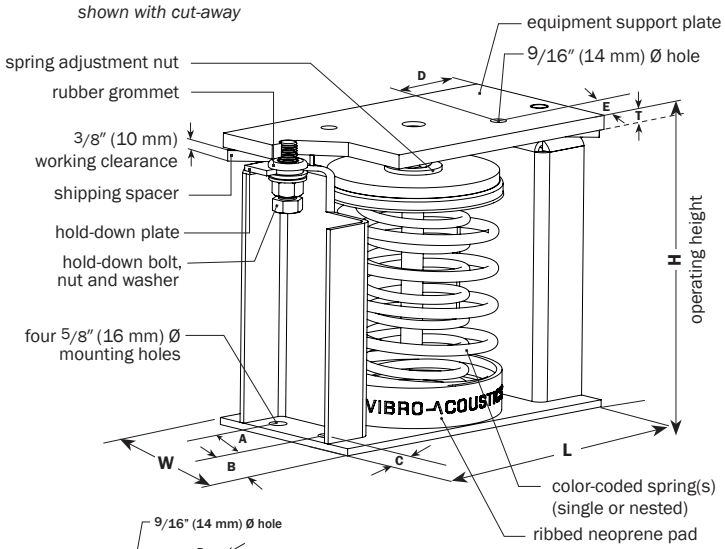

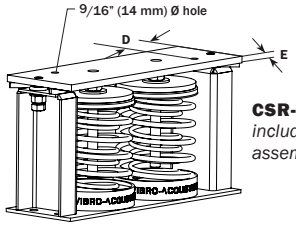

CSR-3A (4400–8200)
includes two spring assemblies

D	3 3/8″ (86 mm)
E	1 3/4″ (44 mm)

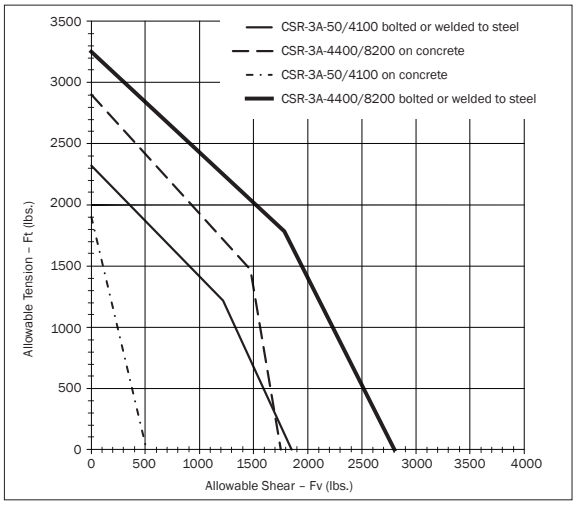

1. Bolted loads are based on using (4) A307 bolts
2. CSR-3A-50/4100 concrete loads are based on using (2) 1/2″ Hilti KB TZ anchors diagonally placed at 2″ embedment and 4″ edge distance with 4″ thick 3000 psi concrete
3. CSR-3A-4400/8200 concrete loads are based on using (4) 1/2″ Hilti KB TZ anchors at 3 1/4″ embedment and 4 1/4″ edge distance with 6″ thick 3000 psi concrete
4. Ratings for concrete are not valid for seismic applications

PERFORMANCE

Model	Spring Color	Rated Load		Deflection at rated load		Isolator Weight †	
	outer-inner	lb	kN	in	mm	lb	kg
CSR-3A-50	Blue	**50**	0.22	**3.2**	81	**32.3**	14.6
CSR-3A-100	Black	**100**	0.44	**3.2**	81	**32.7**	14.8
CSR-3A-200	Black-White	**200**	0.89	**3.1**	79	**35.0**	15.9
CSR-3A-300	Grey	**300**	1.33	**3.1**	79	**33.7**	15.3
CSR-3A-400	Grey-White	**400**	1.78	**3.1**	79	**36.0**	16.3
CSR-3A-500	Grey-Yellow	**500**	2.22	**3.0**	76	**36.1**	16.4
CSR-3A-600	Orange	**600**	2.67	**3.3**	84	**33.1**	15.0
CSR-3A-700	Orange-White	**700**	3.11	**3.3**	84	**35.4**	16.1
CSR-3A-800	Green	**800**	3.56	**3.0**	76	**33.4**	15.2
CSR-3A-900	Green-White	**900**	4.00	**3.0**	76	**36.1**	15.4
CSR-3A-1000	Green-Yellow	**1000**	4.45	**3.0**	76	**36.2**	16.4
CSR-3A-1200	Green-Red	**1200**	5.34	**3.0**	76	**36.6**	16.6
CSR-3A-1500	White	**1500**	6.67	**3.0**	76	**33.8**	15.3
CSR-3A-1900	White-Red	**1900**	8.44	**3.0**	76	**36.7**	16.6
CSR-3A-2200	White-Blue	**2200**	9.97	**3.0**	76	**37.0**	16.8
CSR-3A-2500	White-Black	**2500**	11.12	**3.0**	76	**36.7**	16.6
CSR-3A-3000	Red	**3000**	13.35	**3.0**	76	**37.0**	16.8
CSR-3A-3300	Red-Red	**3300**	14.68	**3.0**	76	**38.6**	17.5
CSR-3A-3600	Red-Blue	**3600**	16.01	**3.0**	76	**39.0**	17.7
CSR-3A-4100	Red-Black	**4100**	18.24	**3.0**	76	**39.7**	18.0
CSR-3A-4400	(2)White-Blue	**4400**	19.57	**3.0**	76	**59.4**	26.9
CSR-3A-5000	(2)White-Black	**5000**	22.24	**3.0**	76	**58.8**	26.7
CSR-3A-5600	(2)Red	**5600**	24.91	**3.0**	76	**57.1**	25.9
CSR-3A-6600	(2)Red-Red	**6600**	29.36	**3.0**	76	**60.3**	27.4
CSR-3A-7200	(2)Red-Blue	**7200**	32.03	**3.0**	76	**62.0**	28.1
CSR-3A-8200	(2)Red-Black	**8200**	36.48	**3.0**	76	**63.0**	28.6

† weights are approximate

DIMENSIONS

Model CSR-3A	L in	L mm	W in	W mm	H in	H mm	A in	A mm	B in	B mm	C in	C mm	T in	T mm
50–4100	**12**	305	**6 1/2**	165	**10 3/8**	264	**2 1/2**	64	**2**	51	**7/8**	22	**1/2**	13
4400–8200	**19**	483	**6 1/2**	165	**10 3/8**	264	**2 1/2**	64	**2**	51	**7/8**	22	**1/2**	13

NOTES

- Laterally and vertically restrained spring type isolators with housings and heavy top plates for equipment support
- Welded steel construction housings with vertically restraining limit stops
- Top plate and restraining bolts are designed to be out of contact with housing during normal operation
- Neoprene grommets are incorporated to minimize short-circuiting of restraining bolts
- Minimum 50% additional travel to solid
- Minimum k_x/k_y ratio of 0.8
- Housing is powder-coated; hot-dipped galvanizing is optional
- All springs are powder-coated
- All components are painted, plated, or coated for outdoor use
- If less than 80% of the top plate is covered by the supported equipment, use an additional plate (same thickness as the isolator's equipment support plate) on top of the isolator

Project:		
Customer:		
Consultant:		
Dwg No.:	**Rev:**	**Drawn by:**
V-A Project Manager:		

plan view of mount locations

1:	6:
2:	7:
3:	8:
4:	9:
5:	10:
QTY of sets required:	

TAG: EQUIPMENT:

COMMENTS: DATE: