VIBRO-ACOUSTICS®
A Swegon Group company

MEMBER VISCMA

tel: 416-291-7371 1-800-565-8401
fax: 416-291-8049 1-888-811-2264
web: www.vibro-acoustics.com
eml: info@vibro-acoustics.com

3″ (76 mm) Deflection PSH Precompressed Spring Hangers

PSH-3

File No.: DS-PSH3-001	Date: 29 Sept 2016
Supersedes: New	Date: New

PSH-3N

shown with cut-away

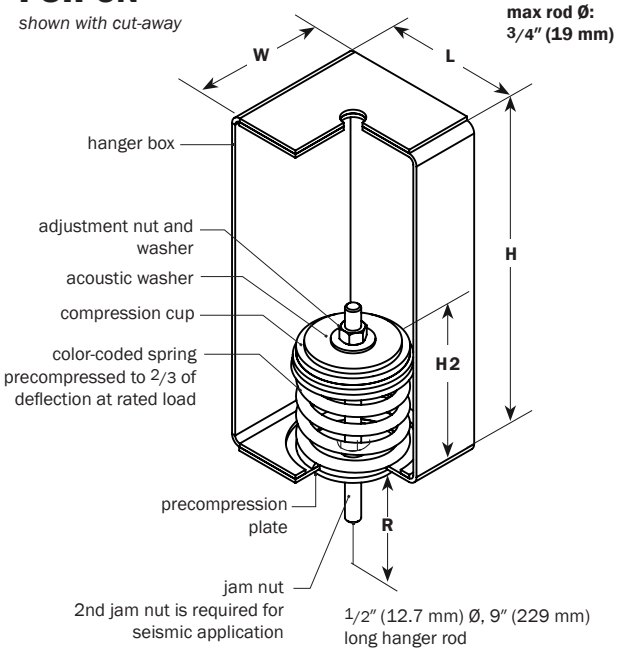

PERFORMANCE

Model	Spring Color	Rated Load		Deflection at rated load		Isolator Weight †	
		lb	kN	**in**	mm	**lb**	kg
PSH-3N-100	White	**100**	0.44	**3.0**	76.2	**12.6**	5.7
PSH-3N-200	Yellow	**200**	0.89	**3.0**	76.2	**12.8**	5.8
PSH-3N-400	Red	**400**	1.78	**3.0**	76.2	**13.1**	5.9
PSH-3N-700	Blue	**700**	3.11	**3.0**	76.2	**13.6**	6.2

† weights are approximate

DIMENSIONS: PSH-3N

Model	L		W		H		H2*		R	
PSH-3N	**in**	mm	**in**	mm	**in**	mm	**in**	mm	**in**	mm
100–700	**5 1/2**	139.7	**5**	127	**12 1/2**	317.5	**5 7/8**	149	**3 1/2**	89

* precompressed height

NOTES

- Spring hanger with steel spring and welded steel housing.
- Springs are precompressed to 2/3 of deflection at rated load
- Hanger is designed to allow support rod misalignment through a 30-degree arc without contacting the hanger box
- Precompression plate serves as vertical uplift stopwasher for seismically restrained equipment, duct or piping. A second jam nut must be added to lock it in place.
- Coupling (by others) is required for attaching to support rod
- Minimum 50% additional travel to solid
- All elements safe at solid loading
- All hardware zinc-plated, Grade 2 minimum
- Springs and hanger boxes are powder coated

Project:		plan view of hanger locations	1:	6:
Customer:			2:	7:
Consultant:			3:	8:
Dwg No.:	**Rev:**	**Drawn by:**	4:	9:
V-A Project Manager:			5:	10:
			QTY of sets required:	
TAG:		EQUIPMENT:		
COMMENTS:				DATE: