VIBRO-ACOUSTICS®
A Swegon Group company

MEMBER VISCMA

tel: 416-291-7371 1-800-565-8401
fax: 416-291-8049 1-888-811-2264
web: www.vibro-acoustics.com
eml: info@vibro-acoustics.com

1″ (25 mm) Deflection CSR Restrained Spring Isolators

CSR-SA

File No.: DS-CSRSA-013 Date: 8 Dec 2016
Supersedes: DS-CSRSA-012 Date: 8 Oct 2014

CSR-SA (30–700)

shown with cut-away

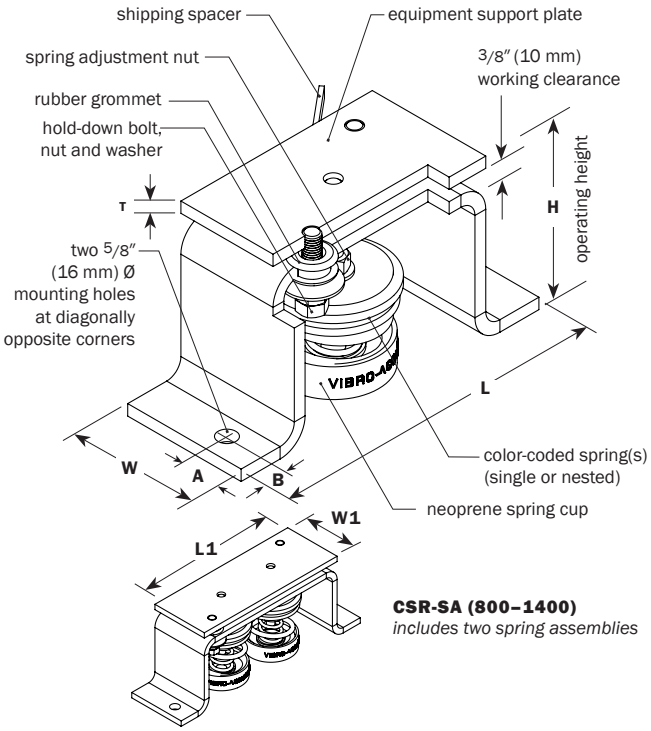

CSR-SA (800–1400)
includes two spring assemblies

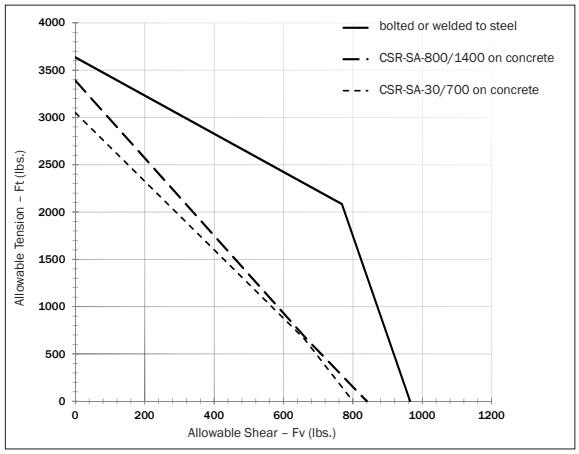

1. Bolted loads are based on using (2) A307 bolts
2. CSR-SA-30/700 concrete loads are based on using (2) 1/2″ Hilti KB TZ anchors at 2″ embedment and 2 3/4″ edge distance with 4″ thick 3000 psi concrete
3. CSR-SA-800/1400 concrete loads are based on using (2) 1/2″ Hilti KB TZ anchors at 2″ embedment and 4″ edge distance with 4″ thick 3000 psi concrete
4. Ratings for concrete are not valid for seismic applications

PERFORMANCE

Model	Spring Color outer-inner	Rated Load lb	kN	Deflection at rated load in	mm	Isolator Weight † lb	kg
*CSR-SA-30	Grey	**30**	0.13	**1.0**	25	**12.1**	5.5
*CSR-SA-60	Grey-Yellow	**60**	0.27	**1.0**	25	**12.2**	5.5
*CSR-SA-100	Orange	**100**	0.44	**1.0**	25	**12.3**	5.6
*CSR-SA-130	Orange-Yellow	**130**	0.57	**1.0**	25	**12.4**	5.6
*CSR-SA-160	Orange-Red	**160**	0.71	**1.0**	25	**12.4**	5.6
*CSR-SA-200	White	**200**	0.89	**1.0**	25	**12.4**	5.6
*CSR-SA-230	White-Yellow	**230**	1.02	**1.0**	25	**12.5**	5.7
*CSR-SA-260	White-Red	**260**	1.16	**1.0**	25	**12.5**	5.7
*CSR-SA-300	White-Blue	**300**	1.33	**1.0**	25	**12.6**	5.7
*CSR-SA-350	White-Black	**350**	1.56	**1.0**	25	**12.5**	5.7
*CSR-SA-400	White-Grey	**400**	1.80	**1.0**	25	**12.6**	5.7
*CSR-SA-500	Blue	**500**	2.22	**1.0**	25	**12.6**	5.7
*CSR-SA-600	Blue-Blue	**600**	2.67	**1.0**	25	**12.7**	5.8
*CSR-SA-700	Blue-Grey	**700**	3.11	**1.0**	25	**12.7**	5.8
CSR-SA-800	(2) White-Grey	**800**	3.58	**1.0**	25	**17.9**	8.1
CSR-SA-1000	(2) Blue	**1000**	4.45	**1.0**	25	**17.9**	8.1
CSR-SA-1200	(2) Blue-Blue	**1200**	5.34	**1.0**	25	**18.0**	8.2
CSR-SA-1400	(2) Blue-Grey	**1400**	6.23	**1.0**	25	**18.1**	8.2

* Models from CSR-SA-30 to -700 are no longer offered. See equivalent CSR-1A models instead.

† weights are approximate

DIMENSIONS

Model CSR-SA	L in	mm	W in	mm	H in	mm	L1 in	mm	W1 in	mm
*30–700	**10 1/2**	267	**4**	102	**5 5/8**	143	**6 3/4**	171	**4**	102
800–1400	**14 1/2**	368	**4**	102	**5 5/8**	143	**10 3/4**	273	**4**	102

Model CSR-SA	A in	mm	B in	mm	T in	mm
*30–700	**1 1/4**	32	**3/4**	19	**3/8**	10
800–1400	**1 1/4**	32	**3/4**	19	**3/8**	10

NOTES

- Laterally and vertically restrained spring type isolators with housings and heavy top plates for equipment support
- Steel construction housings with vertically restraining limit stops
- Top plate and restraining bolts are designed to be out of contact with housing during normal operation
- Neoprene grommets are incorporated to minimize short-circuiting of restraining bolts
- Minimum 50% additional travel to solid
- Minimum k_x/k_y ratio of 0.8
- Housing is powder-coated; hot-dipped galvanizing is optional
- All springs are powder-coated
- All components are painted, plated, or coated for outdoor use
- If less than 80% of the top plate is covered by the supported equipment, use an additional plate (same thickness as the isolator's equipment support plate) on top of the isolator.

Project:		plan view of mount locations	1:	6:
Customer:			2:	7:
Consultant:			3:	8:
Dwg No.:	**Rev:**	**Drawn by:**	4:	9:
V-A Project Manager:			5:	10:
			QTY of sets required:	
TAG:		EQUIPMENT:		
COMMENTS:			DATE:	