VIBRO-ACOUSTICS®
A Swegon Group company
MEMBER VISCMA

tel: 416-291-7371 1-800-565-8401
fax: 416-291-8049 1-888-811-2264
web: www.vibro-acoustics.com
eml: info@vibro-acoustics.com

1″ (25 mm) Deflection SH Spring Hangers

SH-SN

File No.: DS-SHSN-007 Date: 28 Feb 2014
Supersedes: DS-SHSN-006 Date: 12 Jul 2012

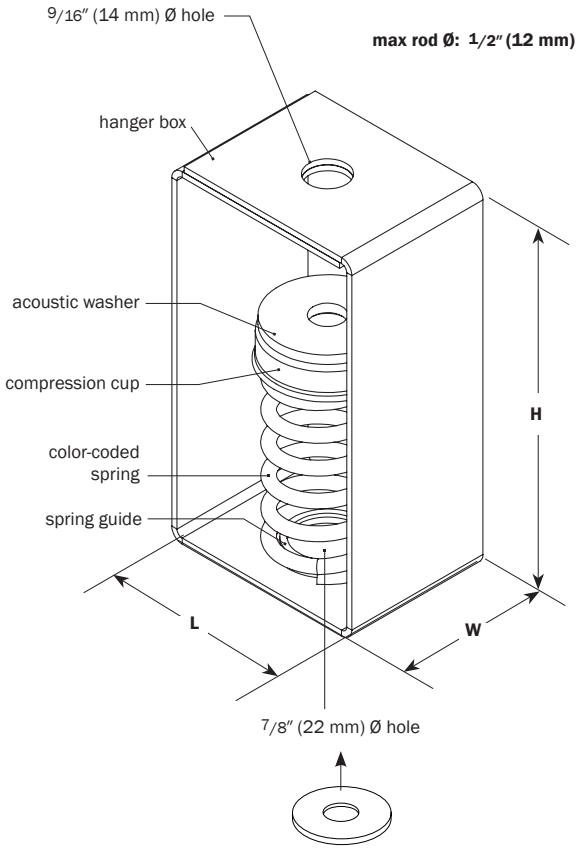

vertical uplift stopwasher
(optional – required for components with seismic restraints)

PERFORMANCE

Model	Spring Color	Rated Load		Deflection at rated load		Isolator Weight †	
		lb	kN	**in**	mm	**lb**	kg
SH-SN-15	White	**15**	0.07	**1.0**	25	**0.8**	0.4
SH-SN-30	Yellow	**30**	0.13	**1.0**	25	**0.8**	0.4
SH-SN-45	Orange	**45**	0.20	**1.0**	25	**0.8**	0.4
SH-SN-60	Red	**60**	0.27	**1.0**	25	**0.8**	0.4
SH-SN-100	Blue	**100**	0.44	**1.0**	25	**0.9**	0.4
SH-SN-150	Black	**150**	0.67	**1.0**	25	**0.9**	0.4
SH-SN-200	Grey	**200**	0.90	**1.0**	25	**1.0**	0.5

for additional loads, see SH-1N † weights are approximate

DIMENSIONS

Model	L		W		H	
SH-SN	**in**	mm	**in**	mm	**in**	mm
15–200	**2 3/4**	70	**2**	51	**5**	127

NOTES

- Spring hanger with steel spring and welded steel housing
- Vertical uplift stopwasher must be added on spring hangers for seismically restrained equipment, duct or piping
- Minimum 50% additional travel to solid
- Springs are powder coated, housings and cups are galvanized

Project:		plan view of hanger locations	1:	6:
Customer:			2:	7:
Consultant:			3:	8:
Dwg No.:	**Rev:**	**Drawn by:**	4:	9:
V-A Project Manager:			5:	10:
			QTY of sets required:	
TAG:		EQUIPMENT:		
COMMENTS:				DATE: