VIBRO-ACOUSTICS®
A Swegon Group company

MEMBER VISCMA

tel: 416-291-7371 1-800-565-8401
fax: 416-291-8049 1-888-811-2264

web: www.vibro-acoustics.com
eml: info@vibro-acoustics.com

3″ (76 mm) Deflection SH Spring Hangers

SH-3

File No.: DS-SH3-007 Date: 24 Feb 2016
Supersedes: DS-SH3-006 Date: 28 Feb 2014

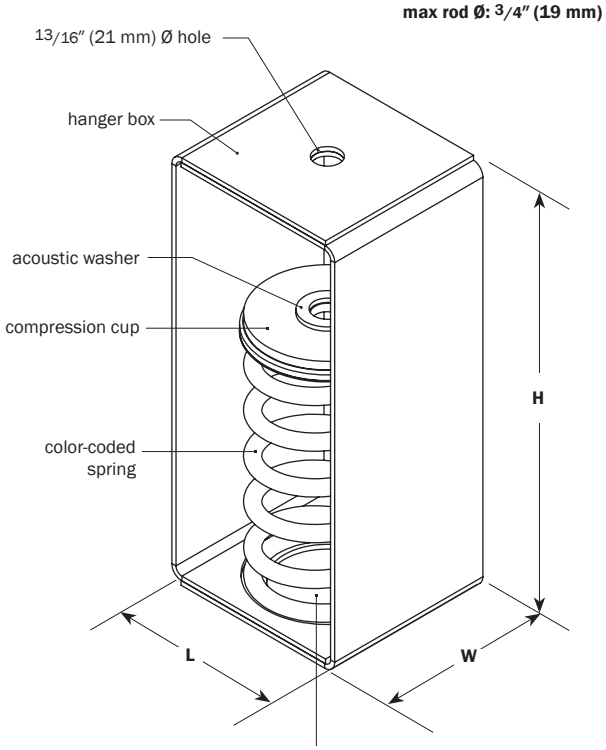

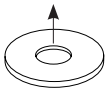

vertical uplift stopwasher
(optional – required for components with seismic restraints)

PERFORMANCE

Model	Spring Color	Rated Load		Deflection at rated load		Isolator Weight †	
		lb	kN	**in**	mm	**lb**	kg
SH-3N-100	White	**100**	0.44	**3.0**	76	**10.2**	4.6
SH-3N-200	Yellow	**200**	0.89	**3.0**	76	**10.4**	4.7
SH-3N-400	Red	**400**	1.78	**3.0**	76	**10.7**	4.9
SH-3N-700	Blue	**700**	3.11	**3.0**	76	**11.1**	5.0

† weights are approximate

DIMENSIONS

Model	L		W		H	
SH-3N	**in**	mm	**in**	mm	**in**	mm
100–700	**5 1/2**	140	**5**	127	**12 1/2**	318

NOTES

- Spring hanger with steel spring and welded steel housing
- Hanger is designed to allow support rod misalignment through a 30-degree arc without contacting the hanger box.
- Vertical uplift stopwasher must be added on spring hangers for seismically restrained equipment, duct or piping
- Minimum 50% additional travel to solid
- Springs, compression cups and housings are powder coated
- Higher capacities are available. Contact Vibro-Acoustics for more information.

Project:		plan view of hanger locations	1:	6:
Customer:			2:	7:
Consultant:			3:	8:
Dwg No.:	**Rev:**	**Drawn by:**	4:	9:
V-A Project Manager:			5:	10:
			QTY of sets required:	
TAG:		EQUIPMENT:		
COMMENTS:				DATE: