VIBRO-ACOUSTICS®
A Swegon Group company

MEMBER VISCMA

tel: 416-291-7371 1-800-565-8401
fax: 416-291-8049 1-888-811-2264
web: www.vibro-acoustics.com
eml: info@vibro-acoustics.com

2″ (50 mm) Deflection PSHB Precompressed Spring Hanger with Bottom Cup

PSHB-2

File No.: DS-PSHB2-005 Date: 23 Feb 2016
Supersedes: DS-PSHB2-004 Date: 16 Jun 2015

Model shown with cut-away

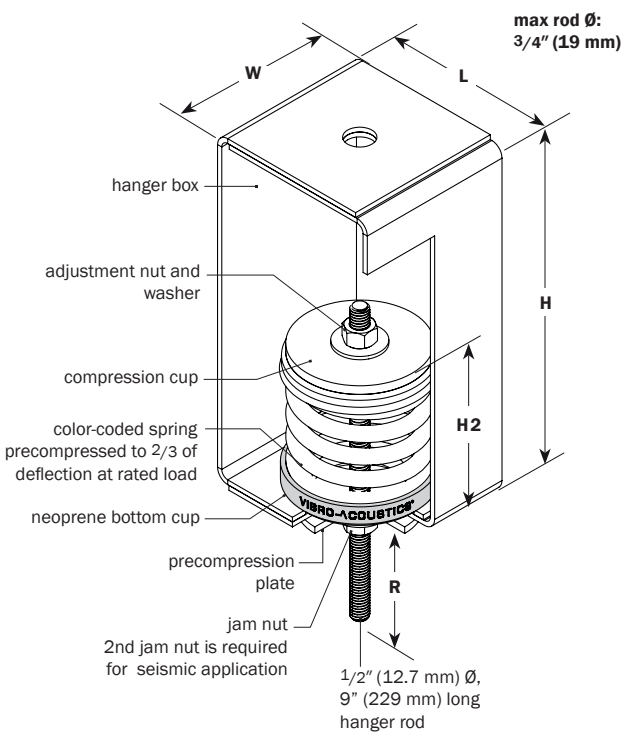

PERFORMANCE

Model	Spring Color	Rated Load lb	Rated Load kN	Deflection at rated load in	Deflection at rated load mm	Isolator Weight † lb	Isolator Weight † kg
PSHB-2N-50	Red	**50**	0.22	**2.0**	51	**8.1**	3.7
PSHB-2N-100	White	**100**	0.44	**2.0**	51	**8.2**	3.7
PSHB-2N-200	Orange	**200**	0.89	**2.0**	51	**8.8**	4.0
PSHB-2N-300	Green	**300**	1.33	**2.1**	53	**8.8**	4.0
PSHB-2N-400	Grey	**400**	1.78	**2.0**	51	**9.1**	4.1
PSHB-2N-500	Yellow	**500**	2.22	**2.1**	53	**9.2**	4.2
PSHB-2N-600	Blue	**600**	2.67	**2.0**	51	**9.7**	4.4
PSHB-2N-800	Black	**800**	3.56	**2.1**	53	**9.3**	4.2
PSHB-2N-1000	Ivory	**1000**	4.45	**2.0**	51	**9.7**	4.4

† weights are approximate

DIMENSIONS: PSHB-2N

Model PSHB-2N	L in	L mm	W in	W mm	H in	H mm	H2* in	H2* mm	R in	R mm
50–1000	**5**	127	**4 1/2**	114	**10 1/4**	260	**4**	102	**4**	102

* precompressed height

NOTES

- Spring hanger with steel spring in a welded steel housing
- Spring is precompressed to 2/3 of deflection at rated load
- Spring sits in a molded neoprene cup which includes a sleeve through the bottom hole
- Hanger is designed to allow support rod misalignment through a 30-degree arc without contacting the hanger box
- Precompression plate can serve as a vertical uplift stopwasher for seismically restrained equipment, duct or piping. A second jam nut must be added to lock it in place
- Coupling (by others) is required for attaching to support rod
- Minimum 50% additional travel to solid
- All elements are safe at solid loading
- All hardware is zinc-plated, Grade 2 minimum
- Spring and hanger box are powder coated

Project:		plan view of hanger locations	1:	6:
Customer:			2:	7:
Consultant:			3:	8:
Dwg No.:	**Rev:**	**Drawn by:**	4:	9:
V-A Project Manager:			5:	10:
			QTY of sets required:	
TAG:		EQUIPMENT:		
COMMENTS:				DATE: