VIBRO-ACOUSTICS®
A Swegon Group company

MEMBER VISCMA

tel: 416-291-7371 1-800-565-8401
fax: 416-291-8049 1-888-811-2264
web: www.vibro-acoustics.com
eml: info@vibro-acoustics.com

SRK Seismic Restraint Kits

SRK

File No.: DS-SRK-009 Date: 25 Nov 2014
Supersedes: DS-SRK-008 Date: 26 Mar 2013

SRK-1400

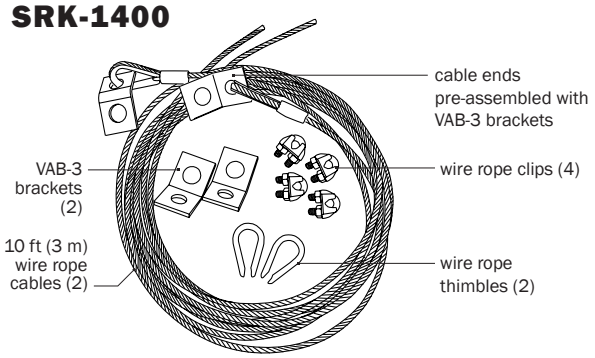

SRK-2880

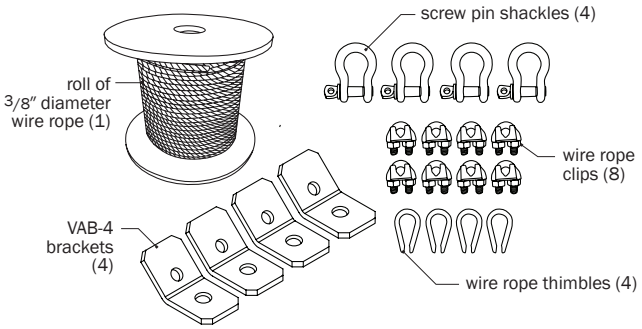

SRK-1400 RESTRAINT KIT INCLUDES:

- 2 wire rope cables 10 ft (3 m) long with factory installed, 45° bent VAB-3 bracket on one end
- 2 wire rope thimbles and 4 wire rope clips
- 2 loose VAB-3 brackets, each with a 7/8″ and a 11/16″ diameter hole.
- SRK-1400-4 kit includes 4 cables, 4 thimbles, 4 brackets, and 8 wire rope clips.

SRK-2880 RESTRAINT KIT (IN BULK ONLY) INCLUDES:

- Roll of 3/8″ diameter wire rope
- Wire rope thimbles (4 for each pair of cable restraints)
- Wire rope clips (8 for each pair of cable restraints)
- Screw pin shackles for attaching to brackets (4 for each pair of cable restraints)
- VAB-4 brackets (4 for each pair of cable restraints), each with a 21/32″ and a 3/4″ diameter hole.
- SRK-2880-4 consists of two pairs of restraint cables and associated hardware.

Vibro-Acoustics can provide additional configurations, sizes, and accessories to meet the specific installation. Accessories include swaging tools, check gauges, wire rope cutters, wire rope clips (U-bolts), and bulk supply of wire rope and hardware.

PERFORMANCE FOR CABLE KITS

Cable Kit Model	Max. Allowed Tension		Cable Size		Anchor Bolt Size Dia.		Cable Kit Weight †	
	lb	N	**in**	mm	**in**	mm	**lb**	kg
SRK-1400	**1400**	6229	**1/4**	6	**5/8**	15.9	**4.4**	2.0
SRK-2880	**2880**	12814	**3/8**	9.5	**5/8**	15.9	**7.5**	3.4

† weights are approximate – double these values for "-4" kits

NOTES

- Restraint kits used to restrain non-structural components, e.g., equipment, ductwork, piping and conduit against seismic, wind, or blast forces.
- Cable sway bracing restraints consist of 7×19 galvanized steel cable sized to resist tension loads with a safety factor of 5:1.
- Cable-end connections use heavy brackets, thimbles, and wire rope clips
- Option: Bulk wire rope and end components available where required lengths exceed standard length.

Project:			1:	6:
Customer:			2:	7:
Consultant:			3:	8:
Dwg No.:	**Rev:**	**Drawn by:**	4:	9:
V-A Project Manager:			5:	10:
			QTY of sets required:	
TAG:		EQUIPMENT:		
COMMENTS:				DATE: