VIBRO-ACOUSTICS®
A Swegon Group company

MEMBER VISCMA

tel: 416-291-7371 1-800-565-8401
fax: 416-291-8049 1-888-811-2264
web: www.vibro-acoustics.com
eml: info@vibro-acoustics.com

SPSA-4 Adjustable Seismic Pipe Stand

SPSA-4

File No.: DS-SPSA4-001 Date: 18 Nov 2016
Supersedes: New Date: New

SPSA-4

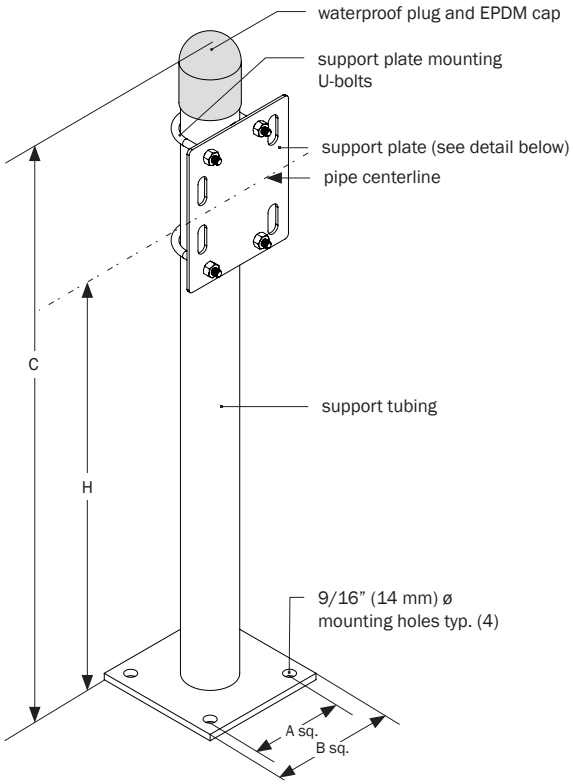

DIMENSIONS AND PERFORMANCE

Nominal Pipe Size*	A		B		H (min)†		H (max)		C		Stand Weight	
	in	mm	in	mm	in	mm	in	mm	in	mm	lb	kg
3/4" – 4	**4 1/2**	114	**6**	152	**7 1/2**	191	**26 1/2**	673	**30 1/2**	775	**15.0**	6.9

* Contact Vibro-Acoustics for optional support plates for larger piping
† Minimum pipe centerline height is based on 4" roof insulation thickness

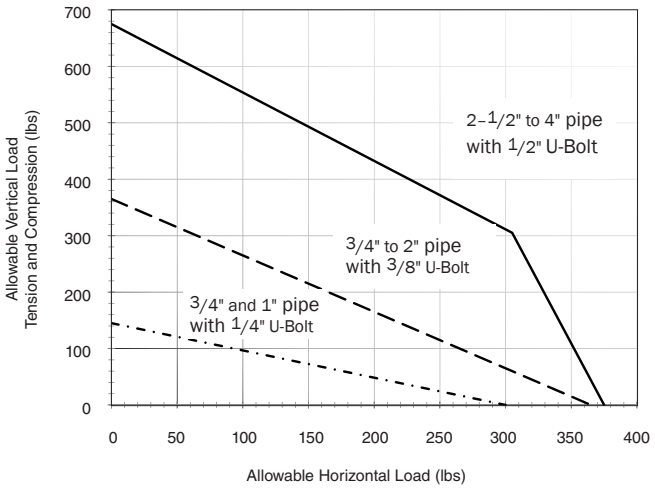

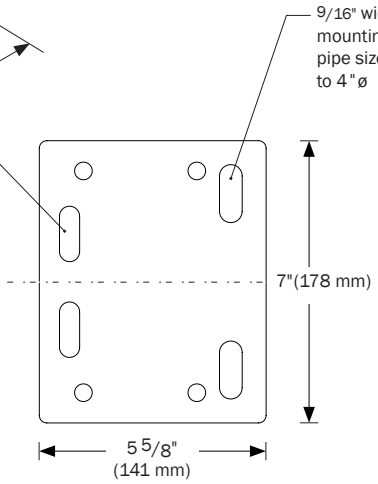

Pipe Size	Minimum U-bolt and Thread (by others)
3/4"	1/4"–20
1"	1/4"–20
1-1/4"	3/8"–16
1-1/2"	3/8"–16
2"	3/8"–16
2-1/2"	1/2"–13
3"	1/2"–13
3-1/2"	1/2"–13
4"	1/2"–13

NOTES

- Pipe stands are fabricated with welded steel construction. All components, including U-bolts are hot dip galvanized for corrosion protection.
- Pipe stands must be installed in accordance with installation instructions to provide the specified performance.
- Supplied with factory installed ribbed plugs and EPDM rubber caps to protect from exposure to weather elements and prevent any water seeping from the top.
  DO NOT REMOVE PLUG AND RUBBER CAP FROM ASSEMBLY
- Engineering analysis must be performed to ensure adequacy for project-specific conditions
- Support plate fits a single U-Bolt for pipe attachment (by others). See installation instructions and the load capacity plot regarding U-bolt sizes.
- Adjustable pipe stands provide a maximum of 19" height adjustment, with 4" roof insulation.

Project:			**Comments:**
Customer:			
Consultant:			
Dwg No.:	**Rev:**	**Drawn by:**	
V-A Project Manager:			
TAG:			
DATE:			