VIBRO-ACOUSTICS®
A Swegon Group company

MEMBER VISCMA

tel: 416-291-7371 1-800-565-8401
fax: 416-291-8049 1-888-811-2264
web: www.vibro-acoustics.com
eml: info@vibro-acoustics.com

1″ (25 mm) Deflection SHR Spring Hangers with Neoprene

SHR-1

File No.: DS-SHR1-011 Date: 6 May 2016
Supersedes: DS-SHR1-10 Date: 24 Feb 2016

SHR-1N

shown with cut-away

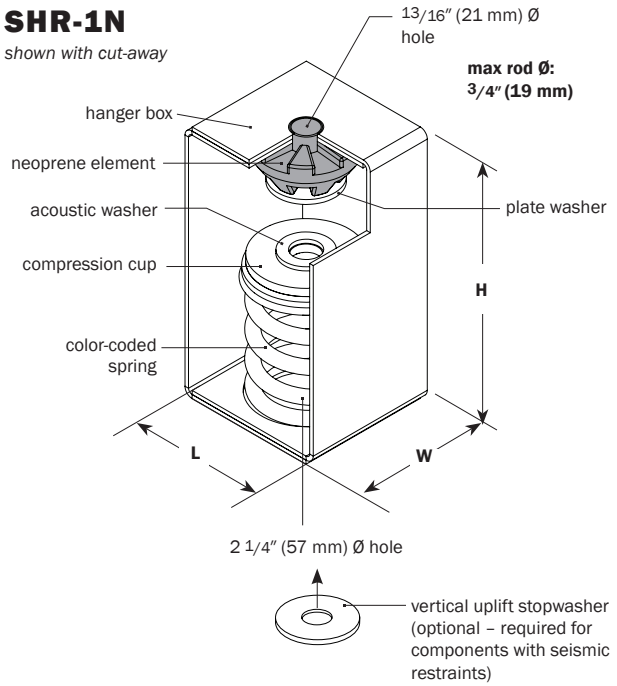

PERFORMANCE

Model	Spring Color outer-inner	Element Color	Rated Load lb	Rated Load kN	Deflection at rated load in	Deflection at rated load mm	Isolator Weight † lb	Isolator Weight † kg
SHR-1N-50*	Blue	Green	**50**	0.22	**1.0**	25	**5.5**	2.5
SHR-1N-100*	White	Green	**100**	0.44	**1.0**	25	**5.8**	2.6
SHR-1N-150*	Orange	Green	**150**	0.67	**1.0**	25	**5.7**	2.6
SHR-1N-200*	Grey	Green	**200**	0.89	**1.0**	25	**6.0**	2.7
SHR-1N-300	Black	Green	**300**	1.33	**1.0**	25	**6.2**	2.8
SHR-1N-400	Green	Red	**400**	1.78	**1.0**	25	**6.2**	2.8
SHR-1N-500	Yellow	Black	**500**	2.22	**1.0**	25	**6.6**	3.0
SHR-1N-600	Red	Blue	**600**	2.67	**1.0**	25	**6.7**	3.0
SHR-1N-800	Blue	Blue	**800**	3.56	**1.0**	25	**6.9**	3.1
SHR-1S-900	Orange-Green	Green	**900**	4.00	**1.0**	25	**14.0**	6.3
SHR-1S-1000	White	Green	**1000**	4.45	**1.0**	25	**13.2**	6.0
SHR-1S-1100	White-White	Green	**1100**	4.89	**1.0**	25	**13.9**	6.3
SHR-1S-1200	White-Grey	Green	**1200**	5.34	**1.0**	25	**14.2**	6.4
SHR-1S-1300	White-Black	Green	**1300**	5.78	**1.0**	25	**14.4**	6.5
SHR-1S-1400	White-Green	Green	**1400**	6.23	**1.0**	25	**14.4**	6.5
SHR-1S-1500	White-Yellow	Green	**1500**	6.67	**1.0**	25	**14.7**	6.7
SHR-1S-1600	White-Red	Green	**1600**	7.12	**1.0**	25	**14.8**	6.7
SHR-1S-1800	White-Blue	Green	**1800**	8.01	**1.0**	25	**15.0**	6.7

* for smaller hanger box, see SHR-SN † weights are approximate

SHR-1S

shown with cut-away

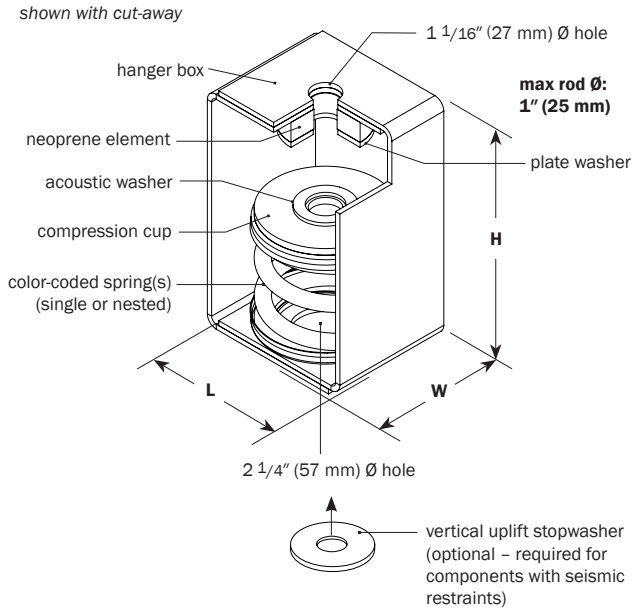

DIMENSIONS: SHR-1N

Model SHR-1N	L in	L mm	W in	W mm	H in	H mm
50–800	**4 1/4**	108	**4**	102	**8 1/4**	210

DIMENSIONS: SHR-1S

Model SHR-1S	L in	L mm	W in	W mm	H in	H mm
900–1800	**5 1/2**	140	**4 1/2**	114	**9**	229

NOTES

- Spring hanger with steel spring and neoprene element in series in a welded steel housing
- Hanger is designed to allow support rod misalignment through a 30-degree arc without contacting the hanger box
- Vertical uplift stopwasher must be added on spring hangers for seismically restrained equipment, duct or piping
- Minimum 50% additional travel to solid
- Springs and housing powder coated, hardware is zinc-plated or powder coated

Project:		plan view of hanger locations	1:	6:
Customer:			2:	7:
Consultant:			3:	8:
Dwg No.:	**Rev:**	**Drawn by:**	4:	9:
V-A Project Manager:			5:	10:
			QTY of sets required:	
TAG:		EQUIPMENT:		
COMMENTS:				DATE: