VIBRO-ACOUSTICS®
A Swegon Group company
MEMBER VISCMA

tel: 416-291-7371 1-800-565-8401
fax: 416-291-8049 1-888-811-2264
web: www.vibro-acoustics.com
eml: info@vibro-acoustics.com

1″ (25 mm) Deflection SHRB Spring Hanger with Neoprene and Bottom Cup

SHRB-SN

File No.: DS-SHRBSN-006 Date: 24 Feb 2016
Supersedes: DS-SHRBSN-005 Date: 28 Feb 2014

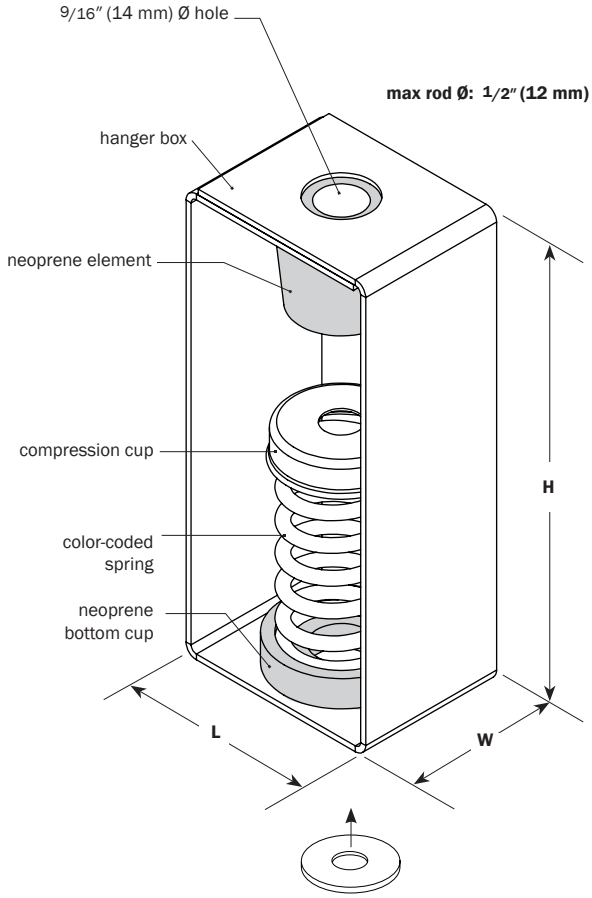

vertical uplift stopwasher
(optional – required for components with seismic restraints)

PERFORMANCE

Model	Spring Color	Element Color	Rated Load lb	Rated Load kN	Spring Deflection at rated load in	Spring Deflection at rated load mm	Isolator Weight † lb	Isolator Weight † kg
SHRB-SN-15	White	Orange	**15**	0.07	**1.0**	25	**1.0**	0.5
SHRB-SN-30	Yellow	Orange	**30**	0.13	**1.0**	25	**1.0**	0.5
SHRB-SN-45	Orange	Blue	**45**	0.20	**1.0**	25	**1.1**	0.5
SHRB-SN-60	Red	Blue	**60**	0.27	**1.0**	25	**1.1**	0.5
SHRB-SN-100	Blue	Green	**100**	0.44	**1.0**	25	**1.1**	0.5
SHRB-SN-150	Black	Red	**150**	0.67	**1.0**	25	**1.1**	0.5
SHRB-SN-200	Grey	Black	**200**	0.90	**1.0**	25	**1.2**	0.5

† weights are approximate

DIMENSIONS

Model SHRB-SN	L in	L mm	W in	W mm	H in	H mm
15–200	**2 3/4**	70	**2**	51	**6 1/4**	152

NOTES

- Spring hanger with steel spring and neoprene element in a welded steel housing
- Spring sits in a molded neoprene cup which includes a sleeve through the bottom hole
- Minimum 50% additional travel to solid
- Springs are powder coated, housings and compression cups are galzanized

Project:		plan view of hanger locations	1:	6:
Customer:			2:	7:
Consultant:			3:	8:
Dwg No.:	**Rev:**	**Drawn by:**	4:	9:
V-A Project Manager:			5:	10:
			QTY of sets required:	
TAG:		EQUIPMENT:		
COMMENTS:				DATE: