VIBRO-ACOUSTICS®
A Swegon Group company

MEMBER VISCMA

tel: 416-291-7371 1-800-565-8401
fax: 416-291-8049 1-888-811-2264
web: www.vibro-acoustics.com
eml: info@vibro-acoustics.com

1″ (25 mm) Deflection SHCHB Spring Ceiling Hangers with Hook and Bottom Cup

SHCHB-SN

File No.: DS-SHCHBSN-002 Date: 6 Jun 2011
Supersedes: DS-SHCHBSN-001 Date: 22 Sep 2010

Model shown with cut-away

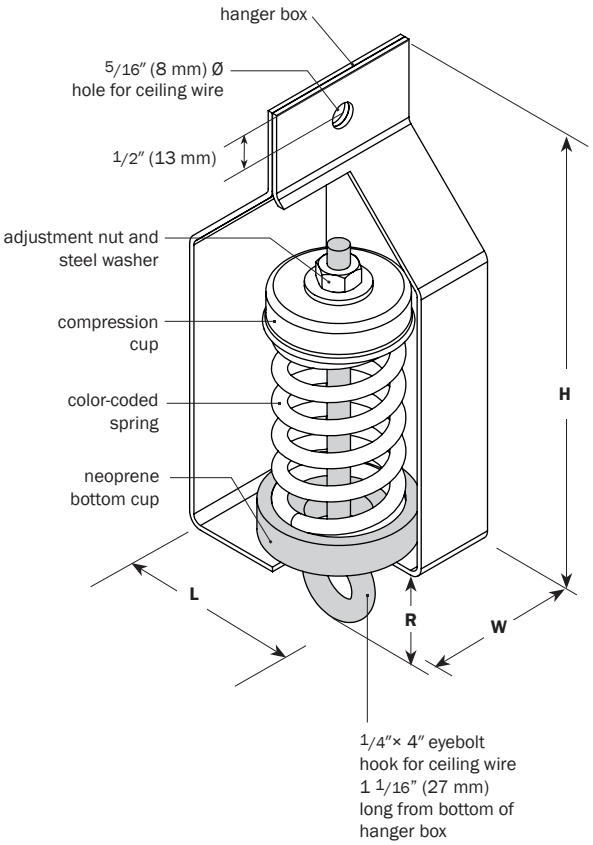

PERFORMANCE

Model	Spring Color	Rated Load		Deflection at rated load		Isolator Weight †	
		lb	kN	in	mm	lb	kg
SHCHB-SN-15	White	**15**	0.07	**1.0**	25	**0.8**	0.4
SHCHB-SN-30	Yellow	**30**	0.13	**1.0**	25	**0.9**	0.4
SHCHB-SN-45	Orange	**45**	0.20	**1.0**	25	**0.9**	0.4
SHCHB-SN-60	Red	**60**	0.27	**1.0**	25	**0.9**	0.4
SHCHB-SN-100	Blue	**100**	0.44	**1.0**	25	**1.0**	0.4
SHCHB-SN-150	Black	**150**	0.67	**1.0**	25	**1.0**	0.4

† weights are approximate

DIMENSIONS

Model	L		W		H		R	
SHCHB-SN	in	mm	in	mm	in	mm	in	mm
15–150	**2 1/2**	64	**2**	51	**6**	152	**1 1/16**	27

NOTES

- Spring hanger with steel spring in a welded steel housing
- A spring sits in a molded neoprene cup which includes a sleeve through the bottom hole to prevent eyebolt hook from touching hanger box
- Minimum 50% additional travel to solid
- Springs are powder coated, housings and compression cups are galvanized
- All hardware zinc-plated, Grade 2 minimum

Project:			1:	6:
Customer:			2:	7:
Consultant:			3:	8:
Dwg No.:	**Rev:**	**Drawn by:**	4:	9:
V-A Project Manager:			5:	10:
			QTY of sets required:	
TAG:		EQUIPMENT:		
COMMENTS:				DATE: