VIBRO-ACOUSTICS®
A Swegon Group company

MEMBER VISCMA

tel: 416-291-7371 1-800-565-8401
fax: 416-291-8049 1-888-811-2264
web: www.vibro-acoustics.com
eml: info@vibro-acoustics.com

1″ (25 mm) Deflection CSR Restrained Spring Isolators (Hot Dip Galvanized Housings)

CSR-1A-H

File No.: DS-CSR1-H-001 Date: 15 Apr 2014
Supersedes: New Date: New

CSR-1A-H (50–4500)

shown with cut-away

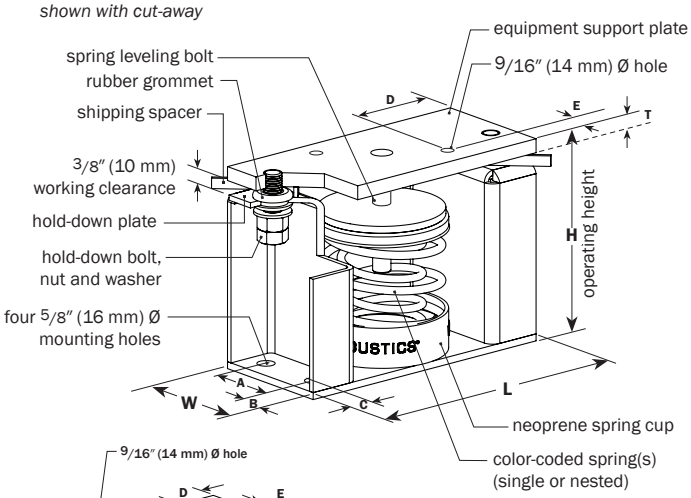

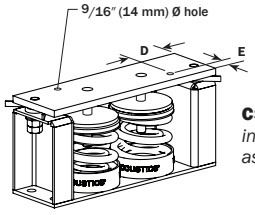

CSR-1A-H (5000–9000)
includes two spring assemblies

D	3 3/8″ (86 mm)
E	3/4″ (19 mm)

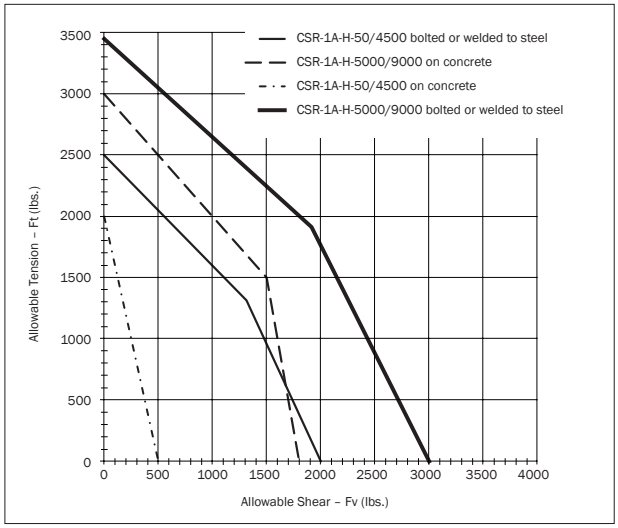

1. Bolted loads are based on using (4) A307 bolts
2. CSR-1A-H-50/4500 concrete loads are based on using (2) 1/2″ Hilti KB TZ anchors diagonally placed at 2″ embedment and 4″ edge distance with 4″ thick 3000 psi concrete
3. CSR-1A-H-5000/9000 concrete loads are based on using (4) 1/2″ Hilti KB TZ anchors at 3 1/4″ embedment and 4 1/4″ edge distance with 6″ thick 3000 psi concrete
4. Ratings for concrete are not valid for seismic applications

PERFORMANCE

Model	Spring Color	Rated Load		Deflection at rated load		Isolator Weight †	
	outer-inner	lb	kN	in	mm	lb	kg
CSR-1A-H-50	Black	**50**	0.22	**1.0**	25	**16.9**	7.7
CSR-1A-H-150	Black-White	**150**	0.67	**1.0**	25	**17.5**	7.9
CSR-1A-H-200	Grey	**200**	0.89	**1.0**	25	**17.5**	7.9
CSR-1A-H-300	Grey-White	**300**	1.33	**1.0**	25	**18.1**	8.2
CSR-1A-H-400	Grey-Grey	**400**	1.78	**1.0**	25	**18.4**	8.3
CSR-1A-H-500	Orange	**500**	2.22	**1.0**	25	**18.3**	8.3
CSR-1A-H-600	Orange-White	**600**	2.67	**1.0**	25	**18.9**	8.6
CSR-1A-H-700	Orange-Grey	**700**	3.11	**1.0**	25	**19.2**	8.7
CSR-1A-H-800	Orange-Black	**800**	3.56	**1.0**	25	**19.4**	8.8
CSR-1A-H-900	Orange-Green	**900**	4.00	**1.0**	25	**19.4**	8.8
CSR-1A-H-1000	White	**1000**	4.45	**1.0**	25	**18.7**	8.5
CSR-1A-H-1100	White-White	**1100**	4.89	**1.0**	25	**19.3**	8.8
CSR-1A-H-1200	White-Grey	**1200**	5.34	**1.0**	25	**19.6**	8.9
CSR-1A-H-1300	White-Black	**1300**	5.78	**1.0**	25	**19.8**	9.0
CSR-1A-H-1400	White-Green	**1400**	6.23	**1.0**	25	**19.8**	9.0
CSR-1A-H-1500	Red	**1500**	6.67	**1.0**	25	**18.7**	8.5
CSR-1A-H-1600	Red-White	**1600**	7.12	**1.0**	25	**19.3**	8.8
CSR-1A-H-1800	Red-Black	**1800**	8.01	**1.0**	25	**19.8**	9.0
CSR-1A-H-2000	Red-Yellow	**2000**	8.90	**1.0**	25	**20.2**	9.2
CSR-1A-H-2500	Red-Ivory	**2500**	11.12	**1.0**	25	**20.3**	9.2
CSR-1A-H-3000	Red-White	**3000**	13.34	**1.0**	25	**20.3**	9.2
CSR-1A-H-3500	Black-Red	**3500**	15.57	**1.0**	25	**21.8**	9.9
CSR-1A-H-3800	Black-Blue	**3800**	16.90	**1.0**	25	**22.1**	10.0
CSR-1A-H-4000	Black-Ivory	**4000**	17.80	**1.0**	25	**22.6**	10.3
CSR-1A-H-4500	Black-White	**4500**	20.02	**1.0**	25	**23.0**	10.4
CSR-1A-H-5000	(2)Red-Ivory	**5000**	22.24	**1.0**	25	**32.0**	14.5
CSR-1A-H-6000	(2)Red-White	**6000**	26.69	**1.0**	25	**32.2**	14.6
CSR-1A-H-6600	(2) Black-Yellow	**6600**	29.36	**1.0**	25	**32.4**	14.7
CSR-1A-H-7000	(2) Black-Red	**7000**	31.14	**1.0**	25	**32.8**	14.9
CSR-1A-H-7600	(2) Black-Blue	**7600**	33.81	**1.0**	25	**33.2**	15.1
CSR-1A-H-8000	(2) Black-Ivory	**8000**	35.59	**1.0**	25	**33.5**	15.2
CSR-1A-H-9000	(2) Black-White	**9000**	40.03	**1.0**	25	**34.0**	15.4

† weights are approximate

DIMENSIONS

Model	L		W		H		A		B		C		T	
CSR-1A-H	in	mm	in	mm	in	mm	in	mm	in	mm	in	mm	in	mm
50–4500	**10**	254	**4 1/2**	114	**7 1/4**	184	**2 1/2**	64	**1**	25	**7/8**	22	**1/2**	13
5000–9000	**15**	381	**4 1/2**	114	**7 1/4**	184	**2 1/2**	64	**1**	25	**7/8**	22	**1/2**	13

NOTES

- Laterally and vertically restrained spring type isolators with housings and heavy top plates for equipment support
- Welded steel construction housings with vertically restraining limit stops
- Top plate and restraining bolts are designed to be out of contact with housing during normal operation
- Neoprene grommets are incorporated to minimize short-circuiting of restraining bolts
- Minimum 50% additional travel to solid
- Minimum k_x/k_y ratio of 0.8
- Housing is hot-dipped galvanized
- All springs are powder-coated
- All components are painted, plated, or coated for outdoor use
- If less than 80% of the top plate is covered by the supported equipment, use an additional plate (same thickness as the isolator's equipment support plate) on top of the isolator

Project:		
Customer:		
Consultant:		
Dwg No.:	**Rev:**	**Drawn by:**
V-A Project Manager:		

plan view of mount locations

1:	6:
2:	7:
3:	8:
4:	9:
5:	10:
QTY of sets required:	

TAG: EQUIPMENT:

COMMENTS: DATE: