VIBRO-ACOUSTICS®
A Swegon Group company

MEMBER VISCMA

tel: 416-291-7371 1-800-565-8401
fax: 416-291-8049 1-888-811-2264
web: www.vibro-acoustics.com
eml: info@vibro-acoustics.com

3″ (76 mm) Deflection FST Free Spring Floor Mounted Isolators with Top

FST-3A

File No.: DS-FST3-008 Date: 17 Jul 2013
Supersedes: DS-FST3-007 Date: 31 Dec 2012

FST-3A (50–4100)

shown with cut-away

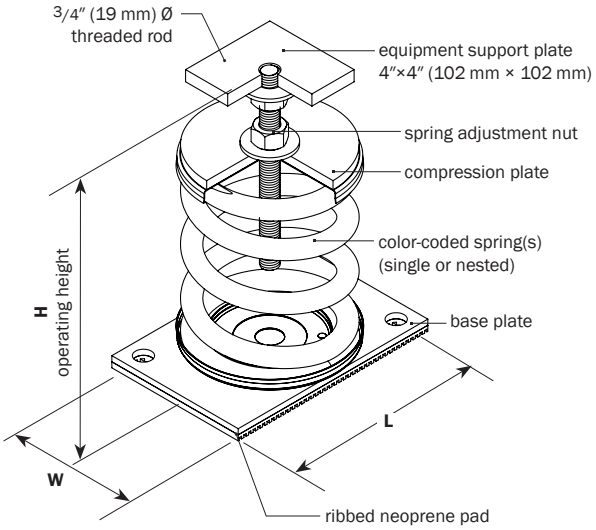

FST-3A (4400–8200)

shown with cut-away

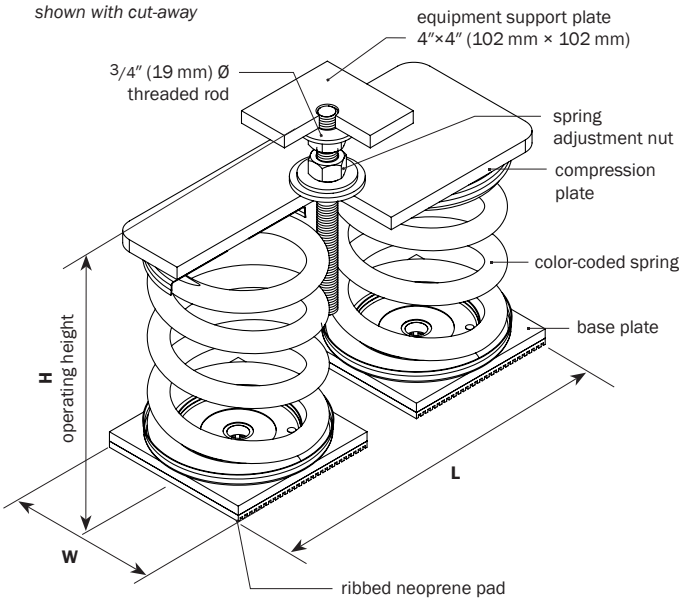

PERFORMANCE

Model	Spring Color	Rated Load		Deflection at rated load		Isolator Weight †	
	outer-inner	lb	kN	in	mm	lb	kg
FST-3A-50	Blue	**50**	0.22	**3.2**	81	**15.6**	7.1
FST-3A-100	Black	**100**	0.44	**3.2**	81	**16.0**	7.3
FST-3A-200	Black-White	**200**	0.89	**3.1**	79	**18.3**	8.3
FST-3A-300	Grey	**300**	1.33	**3.1**	79	**17.0**	7.7
FST-3A-400	Grey-White	**400**	1.78	**3.1**	79	**19.3**	8.8
FST-3A-500	Grey-Yellow	**500**	2.22	**3.0**	76	**19.4**	8.8
FST-3A-600	Orange	**600**	2.67	**3.3**	84	**16.4**	7.4
FST-3A-700	Orange-White	**700**	3.11	**3.3**	84	**18.7**	8.5
FST-3A-800	Green	**800**	3.56	**3.0**	76	**16.7**	7.6
FST-3A-900	Green-White	**900**	4.00	**3.0**	76	**19.4**	8.8
FST-3A-1000	Green-Yellow	**1000**	4.45	**3.0**	76	**19.5**	8.8
FST-3A-1200	Green-Red	**1200**	5.34	**3.0**	76	**19.9**	9.0
FST-3A-1500	White	**1500**	6.67	**3.0**	76	**17.1**	7.8
FST-3A-1900	White-Red	**1900**	8.44	**3.0**	76	**20.0**	9.1
FST-3A-2200	White-Blue	**2200**	9.97	**3.0**	76	**21.3**	9.7
FST-3A-2500	White-Black	**2500**	11.12	**3.0**	76	**20.0**	9.1
FST-3A-3000	Red	**3000**	13.35	**3.0**	76	**20.3**	9.2
FST-3A-3300	Red-Red	**3300**	14.68	**3.0**	76	**21.9**	9.9
FST-3A-3600	Red-Blue	**3600**	16.01	**3.0**	76	**22.3**	10.1
FST-3A-4100	Red-Black	**4100**	18.24	**3.0**	76	**23.0**	10.4
FST-3A-4400	(2)White-Blue	**4400**	19.57	**3.0**	76	**44.4**	20.1
FST-3A-5000	(2)White-Black	**5000**	22.24	**3.0**	76	**43.8**	19.9
FST-3A-5600	(2)Red	**5600**	24.91	**3.0**	76	**42.1**	19.1
FST-3A-6600	(2)Red-Red	**6600**	29.36	**3.0**	76	**45.3**	20.5
FST-3A-7200	(2)Red-Blue	**7200**	32.03	**3.0**	76	**47.0**	21.3
FST-3A-8200	(2)Red-Black	**8200**	36.48	**3.0**	76	**48.0**	21.8

† weights are approximate

DIMENSIONS: FST-3A

Model	L		W		H	
FST-3A	in	mm	in	mm	in	mm
50–4100	**9**	229	**6**	151	**11 1/2**	292
4400–8200	**14**	356	**6**	151	**11 1/2**	292

NOTES

- Free standing, laterally stable, unhoused spring type isolator with levelling nuts to position and secure the equipment
- Minimum 50% additional travel to solid
- Minimum k_x/k_y ratio of 0.8
- All elements safe at solid loading
- All hardware zinc-plated, Grade 2 minimum
- All springs powder coated
- Operating height shown is maximum recommended height.
- When loading isolators and during isolator spring adjustment, ensure that the spring(s) is loaded centered as installed and the spring compression cup is perpendicular to the spring in order to prevent the isolator from bending over.

Project:			plan view of mount locations	1: / 6:
Customer:				2: / 7:
Consultant:				3: / 8:
Dwg No.:	**Rev:**	**Drawn by:**		4: / 9:
V-A Project Manager:				5: / 10:
				QTY of sets required:
TAG:			EQUIPMENT:	
COMMENTS:				DATE: