VIBRO-ACOUSTICS®
A Swegon Group company

MEMBER VISCMA

tel: 416-291-7371 1-800-565-8401
fax: 416-291-8049 1-888-811-2264
web: www.vibro-acoustics.com
eml: info@vibro-acoustics.com

SRD Seismic Rubber Floor Mounts

SRD

File No.: DS-SRD-002 Date: 04 Jan 2016
Supersedes: DS-SRD-001 Date: 11 June 2013

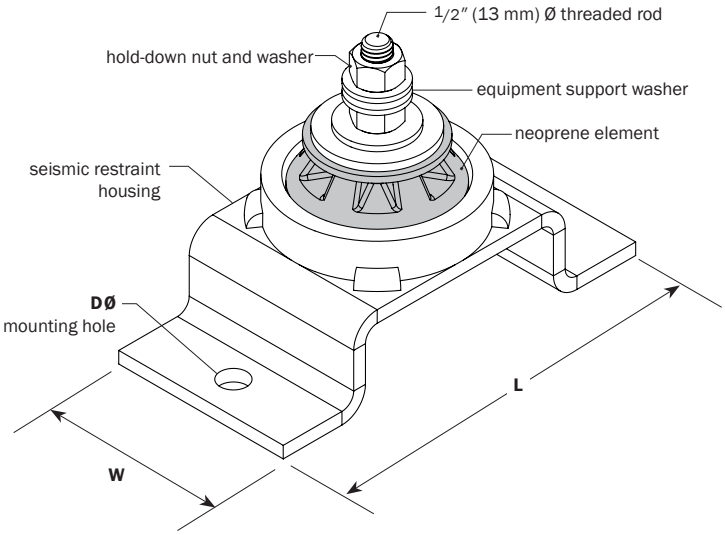

PERFORMANCE

Model	Element Color	Max Load lb	Max Load kN	Deflection	Weight lb	Weight kg
SRD-300	Green	**300**	1.33	Refer to deflection curve shown on bottom left	**3 3/4**	1.7
SRD-400	Red	**400**	1.78		**3 3/4**	1.7
SRD-500	Black	**500**	2.22		**3 3/4**	1.7
SRD-700	Blue	**700**	3.11		**3 3/4**	1.7
SRD-1000	Yellow	**1000**	4.45		**3 3/4**	1.7

† weights are approximate

DIMENSIONS

Type	L in	L mm	W in	W mm	H in	H mm	X in	X mm	W1 in	W1 mm	DØ in	DØ mm
SRD	**7 1/2**	191	**3 1/2**	89	**4.0**	102	**6 1/8**	155	**1 3/4**	44	**9/16**	14

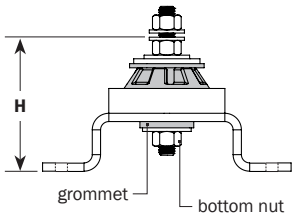

PLAN VIEW

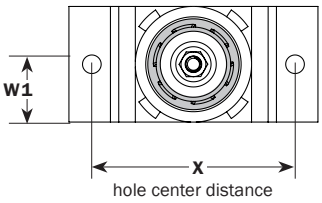

NOTES

- Seismically-restrained, laterally stable rubber floor mount
- "Double-deflection" neoprene type, with top and bottom oversized washers, and support for bolting to equipment.
- Housing hot-dip galvanized; hardware zinc-plated

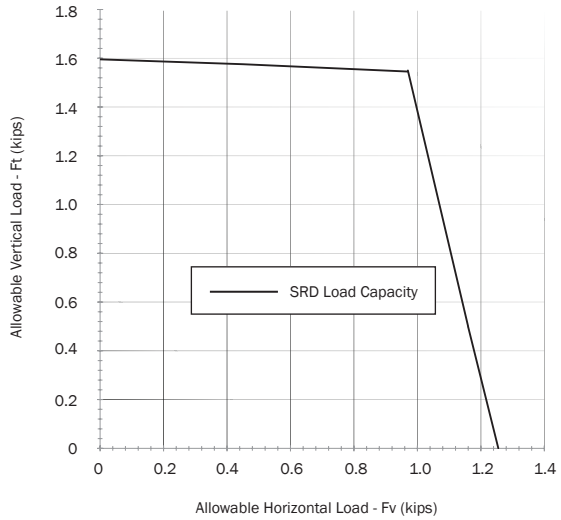

*This load capacity envelope shows the maximum forces that can be applied to the isolator housing with appropriate attachment to structure

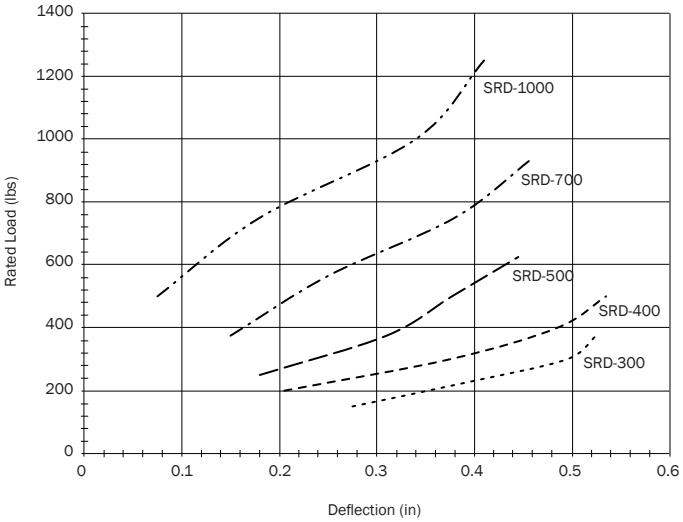

Project:			plan view of mount locations	1: / 6:
Customer:				2: / 7:
Consultant:				3: / 8:
Dwg No.:	**Rev:**	**Drawn by:**		4: / 9:
V-A Project Manager:				5: / 10:
				QTY of sets required:
TAG:			EQUIPMENT:	
COMMENTS:				DATE: