VIBRO-ACOUSTICS®
A Swegon Group company

MEMBER VISCMA

tel: 416-291-7371 1-800-565-8401
fax: 416-291-8049 1-888-811-2264
web: www.vibro-acoustics.com
eml: info@vibro-acoustics.com

SSV-GR Seismic Steel V
with Carbon Steel Grooved Fittings

SSV-GR

File No.: SSV-GR-001 Date: 30 Oct 2014
Supersedes: New Date: New

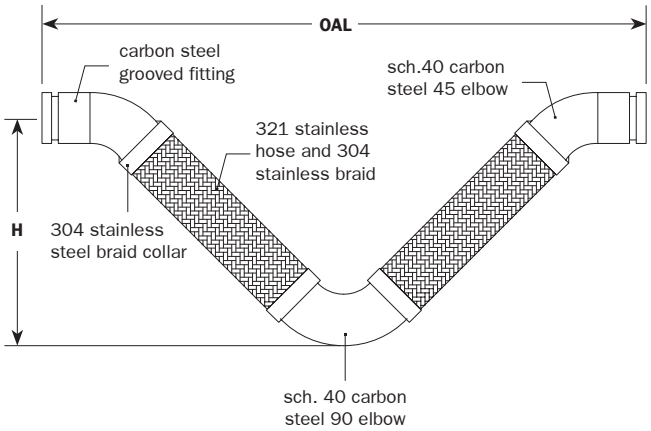

PERFORMANCE AND DIMENSIONS

Model	Nominal Size in	Nominal Size mm	"OAL" Overall Length in	"OAL" Overall Length mm	"H" Center-line to Elbow Dimension in	"H" Center-line to Elbow Dimension mm	Working Pressure @ 70°F psi	Motion X,Y,Z in
SSV2-GR (2″ Motion)								
SSV2-2-GR	**2**	50	**36.85**	936	**14.00**	356	**370**	**2**
SSV2-2.50-GR	**2 1/2**	65	**42.75**	1086	**16.60**	422	**400**	**2**
SSV2-3-GR	**3**	80	**46.75**	1187	**18.40**	467	**288**	**2**
SSV2-4-GR	**4**	100	**51.65**	1312	**20.32**	516	**250**	**2**
SSV2-5-GR	**5**	125	**57.00**	1448	**22.40**	569	**200**	**2**
SSV2-6-GR	**6**	150	**68.50**	1740	**27.40**	696	**175**	**2**
SSV2-8-GR	**8**	200	**79.50**	2019	**30.75**	781	**212**	**2**
SSV2-10-GR	**10**	250	**88.75**	2254	**34.11**	866	**175**	**2**
SSV2-12-GR	**12**	300	**100.50**	2553	**38.50**	978	**160**	**2**
SSV3-GR (3″ Motion)								
SSV3-2-GR	**2**	50	**41.50**	1054	**16.35**	415	**370**	**3**
SSV3-2.50-GR	**2 1/2**	65	**48.00**	1219	**19.25**	489	**570**	**3**
SSV3-3-GR	**3**	80	**52.50**	1334	**21.25**	540	**450**	**3**
SSV3-4-GR	**4**	100	**57.50**	1461	**23.15**	588	**285**	**3**
SSV3-5-GR	**5**	125	**63.50**	1613	**25.50**	648	**210**	**3**
SSV3-6-GR	**6**	150	**74.00**	1880	**30.25**	768	**240**	**3**
SSV3-8-GR	**8**	200	**87.50**	2223	**34.60**	879	**217**	**3**
SSV3-10-GR	**10**	250	**96.00**	2438	**38.00**	965	**165**	**3**
SSV3-12-GR	**12**	300	**108.50**	2756	**42.75**	1086	**155**	**3**
SSV4-GR (4″ Motion)								
SSV4-2-GR	**2**	50	**45.50**	1156	**18.30**	465	**370**	**4**
SSV4-2.50-GR	**2 1/2**	65	**52.50**	1334	**21.50**	546	**570**	**4**
SSV4-3-GR	**3**	80	**57.50**	1461	**23.68**	601	**450**	**4**
SSV4-4-GR	**4**	100	**62.50**	1588	**25.80**	655	**285**	**4**
SSV4-5-GR	**5**	125	**68.50**	1740	**28.20**	716	**210**	**4**
SSV4-6-GR	**6**	150	**80.00**	2032	**33.25**	845	**240**	**4**
SSV4-8-GR	**8**	200	**94.00**	2388	**38.00**	965	**217**	**4**
SSV4-10-GR	**10**	250	**103.00**	2616	**41.20**	1046	**165**	**4**
SSV4-12-GR	**12**	300	**116.00**	2946	**46.50**	1181	**155**	**4**

TEMPERATURE DERATING FACTORS

Temperature °F	Multiplier
200	**0.94**
250	**0.92**
300	**0.88**
350	**0.86**
400	**0.83**
500	**0.78**
600	**0.74**
700	**0.70**

NOTES

- The standard position is with the V and 90 degree elbow hanging down.
- Horizontal and vertical mounting yields the same allowance for motion provided the 90 degree elbow is supported properly to avoid sagging or excessive torquing.
- UL approved product available. Contact Vibro-Acoustics for UL approved product.
- See "Temperature Derating Factors Chart" for pressure derating multipliers by temperature. Apply multiplier to the working pressure to calculate the operating pressure at the corresponding temperature. i.e. working pressure for SSV3-6-GR at 300°F is 0.88 × 240 psi = 211 psi
- Flexible connectors with higher pressure ratings can be custom built with additional braid layers.
- Dimensions shown not for construction. Vibro-Acoustics reserves the right to update dimensions depending on the material availability.
- Seismic V loops with stainless steel end fittings and stainless steel elbows are available upon request.
- All dimensions have ±1/8″ tolerance per foot.
- SSV connectors larger than 1 1/2″ Ø must be supported if installed in any other position than the standard position. Supporting cable or rod should be attached to an eyelet located at the bottom of the 90-degree elbow. Flexible cable or pipe hanger rods can also be used.

Project:	**Model:** **QTY of sets required:**
Customer:	DWN: CHK: REV: DATE:
Consultant:	TAG: UNIT:
V-A Project No.:	COMMENTS:
V-A Project Manager:	