VIBRO-ACOUSTICS®
A Swegon Group company

MEMBER VISCMA

tel: 416-291-7371 1-800-565-8401
fax: 416-291-8049 1-888-811-2264
web: www.vibro-acoustics.com
eml: info@vibro-acoustics.com

4" (102 mm) Deflection SCSR Seismic Restrained Spring Isolators (for Steel)

SCSR-4A

For Steel Structure

File No.: DS-SCSR4-S-002 Date: 31 May 2017
Supersedes: DS-SCSR4-S-001 Date: 11 Oct 2016

SCSR-4A (200–4400)

shown with cut-away

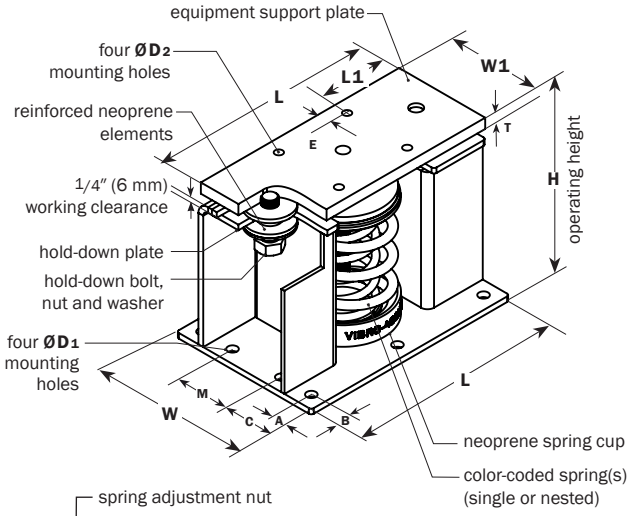

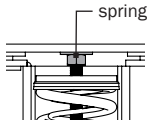

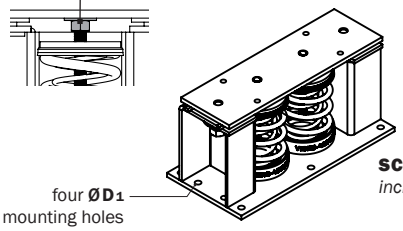

SCSR-4A (4800–8800)
includes two spring assemblies

PERFORMANCE

Model	Spring Color	Rated Load	Deflection at rated load	Isolator Weight †
	outer-inner	lb kN	in mm	lb kg
SCSR-4A-200	Blue	**200** 0.89	**4.0** 102	**74.6** 33.8
SCSR-4A-400	Blue-Blue	**400** 1.78	**4.0** 102	**75.6** 34.3
SCSR-4A-600	Red	**600** 2.67	**4.0** 102	**72.6** 32.9
SCSR-4A-800	Red-Blue	**800** 3.56	**4.0** 102	**72.9** 33.1
SCSR-4A-1000	Red-Red	**1000** 4.45	**4.0** 102	**75.8** 34.4
SCSR-4A-1200	Green	**1200** 5.34	**4.0** 102	**76.2** 34.6
SCSR-4A-1400	Green-Blue	**1400** 6.23	**4.0** 102	**73.3** 33.2
SCSR-4A-1600	Green-Red	**1600** 7.12	**4.0** 102	**75.1** 34.1
SCSR-4A-1800	Green-White	**1800** 8.01	**4.0** 102	**75.6** 34.3
SCSR-4A-2000	Black	**2000** 8.90	**4.0** 102	**76.3** 34.6
SCSR-4A-2200	Black-Blue	**2200** 9.79	**4.0** 102	**76.7** 34.8
SCSR-4A-2400	Black-Red	**2400** 10.68	**4.0** 102	**76.3** 34.6
SCSR-4A-2600	Black-White	**2600** 11.57	**4.0** 102	**77.7** 35.2
SCSR-4A-3000	Black-Black	**3000** 13.34	**4.0** 102	**78.8** 35.7
SCSR-4A-3400	White	**3400** 15.12	**4.0** 102	**78.3** 35.5
SCSR-4A-3800	White-Red	**3800** 16.90	**4.0** 102	**81.9** 37.1
SCSR-4A-4400	White-Black	**4400** 19.57	**4.0** 102	**84.4** 38.3
SCSR-4A-4800	(2)Black-Red	**4800** 21.35	**4.0** 102	**116.3** 52.8
SCSR-4A-5200	(2)Black-White	**5200** 23.13	**4.0** 102	**114.6** 52.0
SCSR-4A-6000	(2)Black-Black	**6000** 26.69	**4.0** 102	**116.6** 52.9
SCSR-4A-6800	(2)White	**6800** 30.25	**4.0** 102	**117.9** 53.5
SCSR-4A-7600	(2)White-Red	**7600** 33.81	**4.0** 102	**123.9** 56.2
SCSR-4A-8800	(2)White-Black	**8800** 39.14	**4.0** 102	**126.0** 57.2

For higher capacities, contact Vibro-Acoustics factory
† weights are approximate

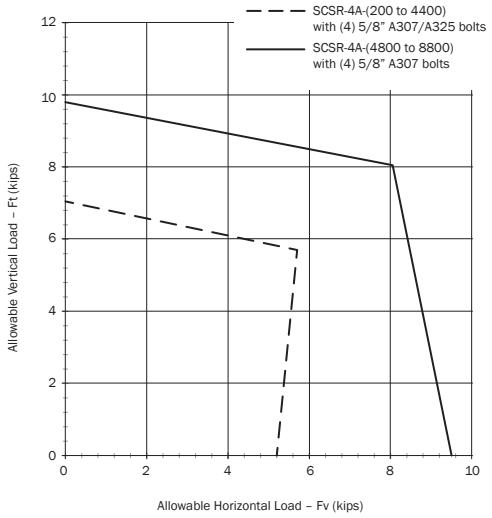

DIMENSIONS

Model SCSR-4A	L in mm	W in mm	H in mm	A in mm	B in mm	C in mm	M in mm
200–4400	**15 1/4** 387	**10 3/8** 264	**11** 280	**1.0** 25	**1.0** 25	**3 3/16** 81	**3 3/4** 95
4800–8800	**21 7/8** 556	**10 5/8** 270	**11** 280	**1.0** 25	**1.0** 25	**3 7/16** 87	**3 3/4** 95

Model SCSR-4A	W1 in mm	L1 in mm	E in mm	ØD1 in mm	ØD2 in mm	T in mm
200–4400	**6 5/8** 168	**5** 127	**1** 25	**11/16** 17	**9/16** 14	**3/4** 19
4800–8800	**6 7/8** 175	**5** 127	**1** 25	**11/16** 17	**9/16** 14	**3/4** 19

NOTES

- Laterally and vertically restrained spring type isolators with housings and heavy top plates for equipment support
- Welded steel construction housings with vertically restraining limit stops
- Top plate and restraining bolts are designed to be out of contact with housing during normal operation
- Reinforced neoprene elements (snubbers) are incorporated to minimize short-circuiting of restraining bolts
- Minimum 50% additional travel to solid
- Minimum k_x/k_y ratio of 0.8
- Housing is hot-dipped galvanized
- All components are painted, plated, or coated for outdoor applications
- If less than 80% of the top plate is covered by the supported equipment, use an additional plate (same thickness as the isolator's equipment support plate) on top of the isolator. See installation instructions.
- All springs are powder-coated
- Springs supported with neoprene cups for noise isolation
- Springs are pre-compressed to 35% of the capacity inside the housing

Project:		plan view of mount locations	1:	6:
Customer:			2:	7:
Consultant:			3:	8:
Dwg No.:	**Rev:**	**Drawn by:**	4:	9:
V-A Project Manager:			5:	10:
			QTY of sets required:	
TAG:		EQUIPMENT:		
COMMENTS:				DATE: