VIBRO-ACOUSTICS®
A Swegon Group company

MEMBER VISCMA

tel: 416-291-7371 1-800-565-8401
fax: 416-291-8049 1-888-811-2264
web: www.vibro-acoustics.com
eml: info@vibro-acoustics.com

1″ (25 mm) Deflection SHCH Spring Ceiling Hangers with Hook

SHCH-SN

File No.: DS-SHCHSN-004 Date: 6 Jun 2011
Supersedes: DS-SHCHSN-003 Date: 13 Aug 2010

Model shown with cut-away

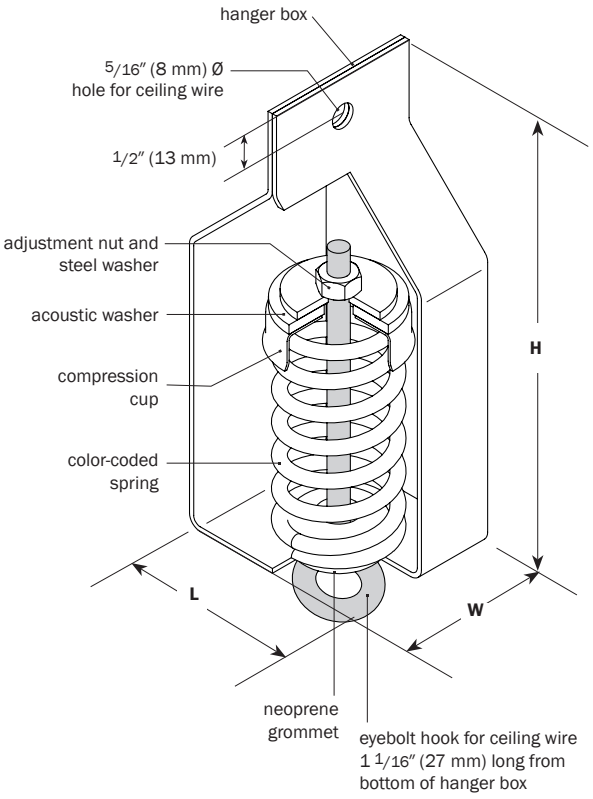

PERFORMANCE

Model	Spring Color	Rated Load lb	Rated Load kN	Deflection at rated load in	Deflection at rated load mm	Isolator Weight † lb	Isolator Weight † kg
SHCH-SN-15	White	**15**	0.07	**1.0**	25	**0.9**	0.4
SHCH-SN-30	Yellow	**30**	0.13	**1.0**	25	**0.9**	0.4
SHCH-SN-45	Orange	**45**	0.20	**1.0**	25	**1.0**	0.4
SHCH-SN-60	Red	**60**	0.27	**1.0**	25	**1.0**	0.4
SHCH-SN-100	Blue	**100**	0.44	**1.0**	25	**1.0**	0.5
SHCH-SN-150	Black	**150**	0.67	**1.0**	25	**1.0**	0.5

† weights are approximate

DIMENSIONS

Model SHCH-SN	L in	L mm	W in	W mm	H in	H mm
15–150	**2 1/2**	64	**2**	51	**6**	152

NOTES

- Spring hanger with steel spring and welded steel housing
- Minimum 50% additional travel to solid
- Springs are powder coated, housings and compression cups are galvanized
- All hardware zinc plated, Grade 2 minimum
- Neoprene grommet in bottom hole prevents eyebolt hook from touching hanger box

Project:			1:	6:
Customer:			2:	7:
Consultant:			3:	8:
Dwg No.:	**Rev:**	**Drawn by:**	4:	9:
V-A Project Manager:			5:	10:
			QTY of sets required:	
TAG:		EQUIPMENT:		
COMMENTS:				DATE: