VIBRO-ACOUSTICS®
A Swegon Group company

MEMBER VISCMA

tel: 416-291-7371 1-800-565-8401
fax: 416-291-8049 1-888-811-2264
web: www.vibro-acoustics.com
eml: info@vibro-acoustics.com

2″ (50 mm) Deflection FST Free Spring Floor Mounted Isolators with Top

FST-2A

File No.: DS-FST2-010 Date: 22 Aug 2013
Supersedes: DS-FST2-009 Date: 10 Jul 2013

FST-2A (50–4500)

shown with cut-away

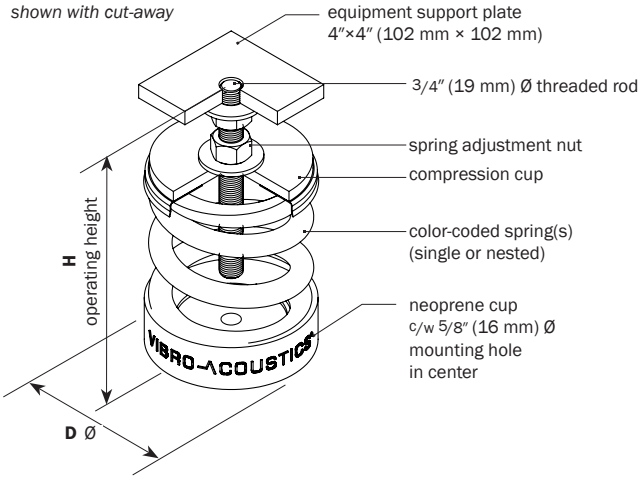

FST-2A (5200–9000)

shown with cut-away

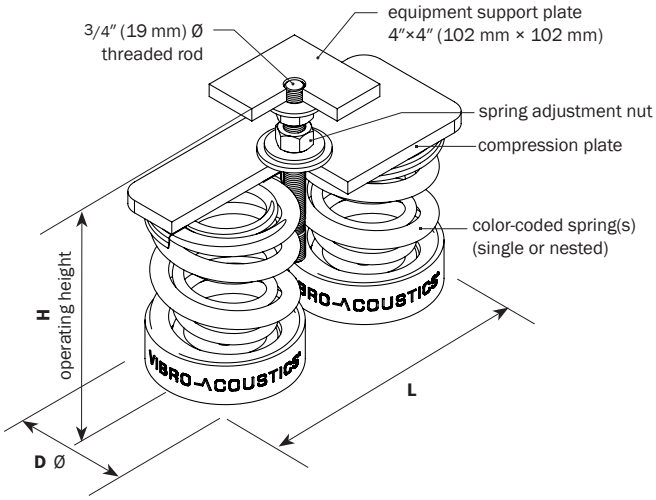

PERFORMANCE

Model	Spring Color	Rated Load		Deflection at rated load		Isolator Weight †	
	outer-inner	lb	kN	in	mm	lb	kg
FST-2A-50	Grey	**50**	0.22	**2.0**	51	**8.9**	4.0
FST-2A-100	Blue	**100**	0.44	**2.0**	51	**8.9**	4.0
FST-2A-150	Grey-White	**150**	0.67	**2.0**	51	**9.6**	4.4
FST-2A-200	Blue-White	**200**	0.89	**2.0**	51	**9.6**	4.4
FST-2A-300	Blue-Orange	**300**	1.33	**2.0**	51	**10.2**	4.6
FST-2A-400	Red	**400**	1.78	**2.0**	51	**10.1**	4.6
FST-2A-500	Red-White	**500**	2.22	**2.0**	51	**10.8**	4.9
FST-2A-600	Red-Orange	**600**	2.67	**2.0**	51	**11.4**	5.2
FST-2A-700	Red-Green	**700**	3.11	**2.0**	51	**11.4**	5.2
FST-2A-800	Green	**800**	3.56	**2.0**	51	**10.6**	4.8
FST-2A-900	Green-White	**900**	4.00	**2.0**	51	**11.3**	5.1
FST-2A-1000	Green-Orange	**1000**	4.45	**2.0**	51	**11.9**	5.4
FST-2A-1100	Green-Green	**1100**	4.89	**2.0**	51	**11.9**	5.4
FST-2A-1200	Green-Grey	**1200**	5.34	**2.0**	51	**12.1**	5.5
FST-2A-1300	Green-Yellow	**1300**	5.78	**2.0**	51	**12.4**	5.6
FST-2A-1400	Green-Blue	**1400**	6.23	**2.0**	51	**12.7**	5.8
FST-2A-1600	Green-Black	**1600**	7.12	**2.0**	51	**12.4**	5.6
FST-2A-1800	Green-Ivory	**1800**	8.01	**2.0**	51	**12.8**	5.8
FST-2A-2000	Black	**2000**	8.90	**2.0**	51	**10.6**	4.8
FST-2A-2200	Black-Orange	**2200**	9.97	**2.0**	51	**11.9**	5.4
FST-2A-2400	Black-Grey	**2400**	10.68	**2.0**	51	**12.1**	5.5
FST-2A-2600	Black-Blue	**2600**	11.57	**2.0**	51	**12.7**	5.8
FST-2A-2800	Black-Black	**2800**	12.46	**2.0**	51	**12.4**	5.6
FST-2A-3200	Black-Red	**3200**	14.23	**2.0**	51	**13.1**	5.9
FST-2A-3700	Blue-Grey	**3700**	16.45	**2.0**	51	**13.3**	6.0
FST-2A-4100	Blue-Black	**4100**	18.24	**2.0**	51	**17.0**	7.7
FST-2A-4500	Blue-Red	**4500**	20.02	**2.0**	51	**16.6**	7.5
FST-2A-5200	(2)Black-Blue	**5200**	23.13	**2.0**	51	**27.6**	12.5
FST-2A-6400	(2)Black-Red	**6400**	28.46	**2.0**	51	**28.4**	12.9
FST-2A-7400	(2)Blue-Grey	**7400**	32.92	**2.0**	51	**29.0**	13.1
FST-2A-8200	(2)Blue-Black	**8200**	36.48	**2.0**	51	**29.8**	13.5
FST-2A-9000	(2)Blue-Red	**9000**	40.03	**2.0**	51	**31.0**	14.1

† weights are approximate

DIMENSIONS: FST-2A

Model FST-2A	D Ø in	D Ø mm	W in	W mm	L in	L mm	H in	H mm
50–4500	**5 1/4**	135	–	–	–	–	**9 1/2**	241
5200–9000	**5 1/4**	135	**5**	127	**11 1/2**	292	**9 1/2**	241

NOTES

- Free standing, laterally stable, unhoused spring type isolator with levelling nuts to position and secure the equipment
- Minimum 50% additional travel to solid
- Minimum k_x/k_y ratio of 0.8
- All elements safe at solid loading
- All hardware zinc-plated, Grade 2 minimum
- All springs powder coated
- Operating height shown is maximum recommended height.
- When loading isolators and during isolator spring adjustment, ensure that the spring(s) is loaded centered as installed and the spring compression cup is perpendicular to the spring in order to prevent the isolator from bending over.

Project:		plan view of mount locations	1:	6:
Customer:			2:	7:
Consultant:			3:	8:
Dwg No.:	**Rev:**	**Drawn by:**	4:	9:
V-A Project Manager:			5:	10:
			QTY of sets required:	
TAG:		EQUIPMENT:		
COMMENTS:				DATE: