VIBRO-ACOUSTICS®
A Swegon Group company
MEMBER VISCMA

tel: 416-291-7371 1-800-565-8401
fax: 416-291-8049 1-888-811-2264
web: www.vibro-acoustics.com
eml: info@vibro-acoustics.com

3″ (76 mm) Deflection SCSR Seismic Restrained Spring Isolators (for Steel)

SCSR-3A

For Steel Structure

File No.: DS-SCSR3-S-006 Date: 28 Mar 2014
Supersedes: DS-SCSR3-S-005 Date: 5 Feb 2014

SCSR-3A (50–4100)

shown with cut-away

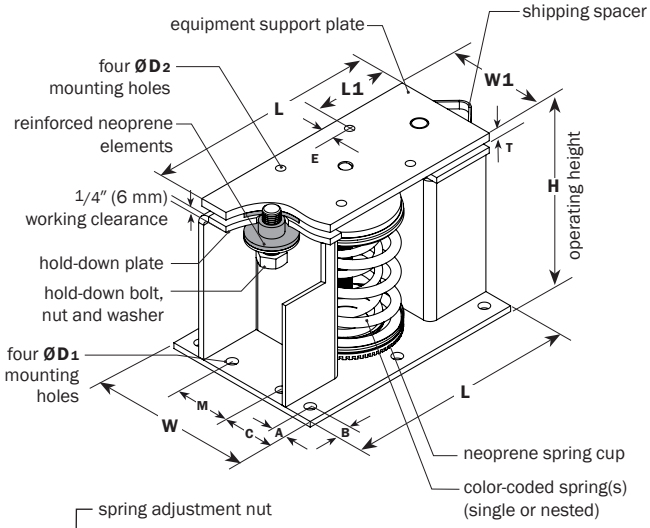

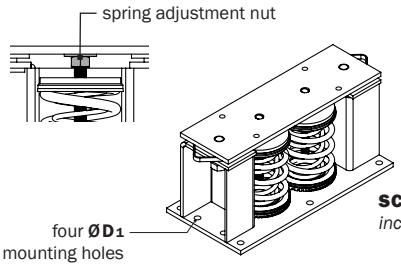

SCSR-3A (4400–8200)
includes two spring assemblies

PERFORMANCE

Model	Spring Color outer-inner	Rated Load lb	kN	Deflection at rated load in	mm	Isolator Weight † lb	kg
SCSR-3A-50	Blue	**50**	0.22	**3.2**	81	**68.3**	31.0
SCSR-3A-100	Black	**100**	0.44	**3.2**	81	**68.7**	31.2
SCSR-3A-200	Black-White	**200**	0.89	**3.1**	79	**71.0**	32.3
SCSR-3A-300	Grey	**300**	1.33	**3.1**	79	**69.7**	31.7
SCSR-3A-400	Grey-White	**400**	1.78	**3.1**	79	**72.0**	32.7
SCSR-3A-500	Grey-Yellow	**500**	2.22	**3.0**	76	**72.1**	32.8
SCSR-3A-600	Orange	**600**	2.67	**3.3**	84	**69.1**	31.4
SCSR-3A-700	Orange-White	**700**	3.11	**3.3**	84	**71.4**	32.5
SCSR-3A-800	Green	**800**	3.56	**3.0**	76	**69.4**	31.5
SCSR-3A-900	Green-White	**900**	4.00	**3.0**	76	**72.1**	32.8
SCSR-3A-1000	Green-Yellow	**1000**	4.45	**3.0**	76	**72.2**	32.8
SCSR-3A-1200	Green-Red	**1200**	5.34	**3.0**	76	**72.6**	33.0
SCSR-3A-1500	White	**1500**	6.67	**3.0**	76	**69.8**	31.7
SCSR-3A-1900	White-Red	**1900**	8.44	**3.0**	76	**72.7**	33.0
SCSR-3A-2200	White-Blue	**2200**	9.97	**3.0**	76	**73.0**	33.2
SCSR-3A-2500	White-Black	**2500**	11.12	**3.0**	76	**72.7**	33.0
SCSR-3A-3000	Red	**3000**	13.35	**3.0**	76	**73.0**	33.2
SCSR-3A-3300	Red-Red	**3300**	14.68	**3.0**	76	**74.6**	33.9
SCSR-3A-3600	Red-Blue	**3600**	16.01	**3.0**	76	**75.0**	34.1
SCSR-3A-4100	Red-Black	**4100**	18.24	**3.0**	76	**75.7**	34.4
SCSR-3A-4400	(2)White-Blue	**4400**	19.57	**3.0**	76	**111.4**	50.6
SCSR-3A-5000	(2)White-Black	**5000**	22.24	**3.0**	76	**110.8**	50.4
SCSR-3A-5600	(2)Red	**5600**	24.91	**3.0**	76	**109.1**	49.6
SCSR-3A-6600	(2)Red-Red	**6600**	29.36	**3.0**	76	**112.3**	51.0
SCSR-3A-7200	(2)Red-Blue	**7200**	32.03	**3.0**	76	**114.0**	51.8
SCSR-3A-8200	(2)Red-Black	**8200**	36.48	**3.0**	76	**115.0**	52.3

For higher capacities, contact Vibro-Acoustics factory
† weights are approximate

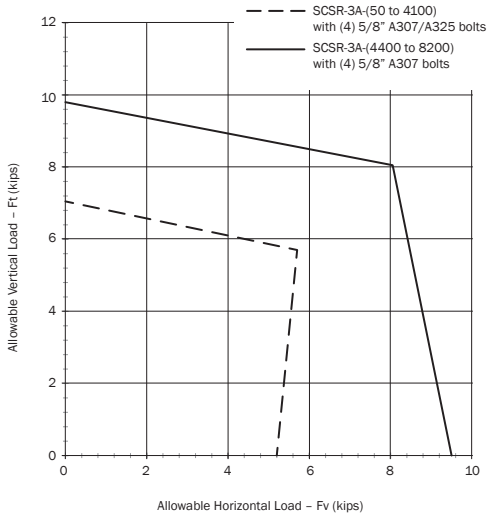

DIMENSIONS

Model SCSR-3A	L in	mm	W in	mm	H in	mm	A in	mm	B in	mm	C in	mm	M in	mm
50–4100	**15 1/4**	387	**10 3/8**	264	**10 3/4**	273	**1.0**	25	**1.0**	25	**3 3/16**	81	**3 3/4**	95
4400–8200	**21 7/8**	556	**10 5/8**	270	**10 3/4**	273	**1.0**	25	**1.0**	25	**3 7/16**	87	**3 3/4**	95

Model SCSR-3A	W1 in	mm	L1 in	mm	E in	mm	ØD1 in	mm	ØD2 in	mm	T in	mm
50–4100	**6 5/8**	168	**5**	127	**1**	25	**11/16**	17	**9/16**	14	**1/2**	13
4400–8200	**6 7/8**	175	**5**	127	**1**	25	**11/16**	17	**9/16**	14	**1/2**	13

NOTES

- Laterally and vertically restrained spring type isolators with housings and heavy top plates for equipment support
- Welded steel construction housings with vertically restraining limit stops
- Top plate and restraining bolts are designed to be out of contact with housing during normal operation
- Reinforced neoprene elements (snubbers) are incorporated to minimize short-circuiting of restraining bolts
- Minimum 50% additional travel to solid
- Minimum k_x/k_y ratio of 0.8
- Housing is powder-coated; hot-dipped galvanizing is optional
- All components are painted, plated, or coated for outdoor applications
- If less than 80% of the top plate is covered by the supported equipment, use an additional plate (same thickness as the isolator's equipment support plate) on top of the isolator. See installation instructions.
- All springs are powder-coated
- Springs supported with neoprene cups for noise isolation

OPTION ☐ **HOT-DIP GALVANIZED**

Project:		
Customer:		
Consultant:		
Dwg No.:	**Rev:**	**Drawn by:**
V-A Project Manager:		

plan view of mount locations

1:	6:
2:	7:
3:	8:
4:	9:
5:	10:
QTY of sets required:	

TAG: EQUIPMENT:

COMMENTS: DATE: