VIBRO-ACOUSTICS®
A Swegon Group company

MEMBER VISCMA

tel: 416-291-7371 1-800-565-8401
fax: 416-291-8049 1-888-811-2264
web: www.vibro-acoustics.com
eml: info@vibro-acoustics.com

2″ (51 mm) Deflection SHR Spring Hangers with Neoprene

SHR-2

File No.: DS-SHR2-012 Date: 06 May 2016
Supersedes: DS-SHR2-011 Date: 24 Feb 2016

SHR-2N

shown with cut-away

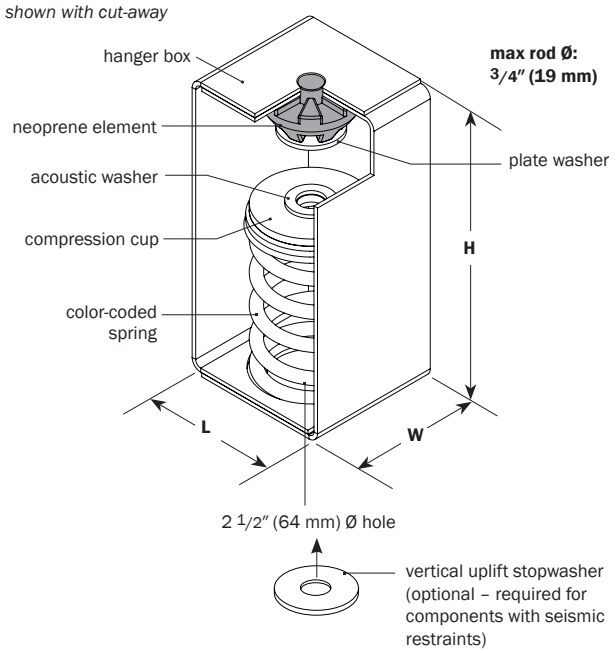

SHR-2S

shown with cut-away

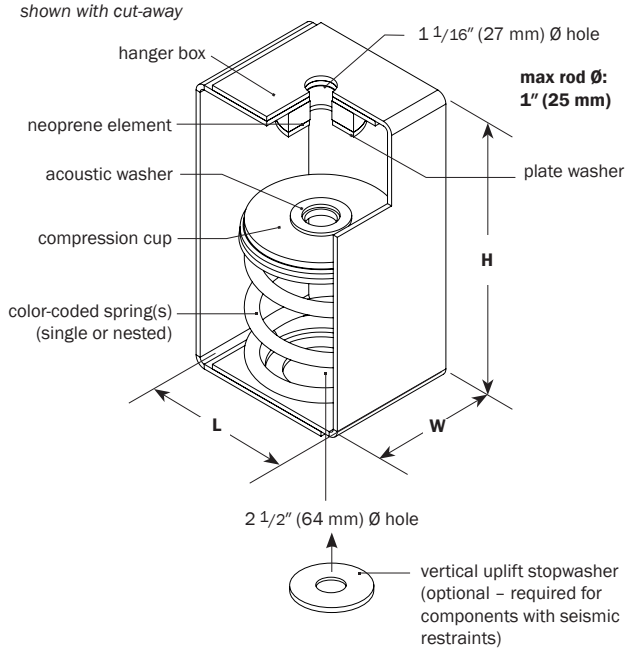

PERFORMANCE

Model	Spring Color outer-inner	Element Color	Rated Load lb	Rated Load kN	Deflection at rated load in	Deflection at rated load mm	Isolator Weight † lb	Isolator Weight † kg
SHR-2N-50	Red	Green	**50**	0.22	**2.0**	51	**7.8**	3.5
SHR-2N-100	White	Green	**100**	0.44	**2.0**	51	**7.9**	3.6
SHR-2N-200	Orange	Green	**200**	0.89	**2.0**	51	**8.5**	3.9
SHR-2N-300	Green	Green	**300**	1.33	**2.1**	53	**8.5**	3.9
SHR-2N-400	Grey	Red	**400**	1.78	**2.0**	51	**8.7**	4.0
SHR-2N-500	Yellow	Black	**500**	2.22	**2.1**	53	**8.9**	4.0
SHR-2N-600	Blue	Blue	**600**	2.67	**2.0**	51	**9.4**	4.3
SHR-2N-800	Black	Blue	**800**	3.56	**2.1**	53	**9.0**	4.1
SHR-2N-1000	Ivory	Yellow	**1000**	4.45	**2.0**	51	**9.4**	4.3
SHR-2S-800	Green	Green	**800**	3.56	**2.0**	51	**17.1**	7.8
SHR-2S-900	Green-White	Green	**900**	4.00	**2.0**	51	**17.8**	8.1
SHR-2S-1000	Green-Orange	Green	**1000**	4.45	**2.0**	51	**18.4**	8.4
SHR-2S-1100	Green-Green	Green	**1100**	4.89	**2.0**	51	**18.4**	8.4
SHR-2S-1200	Green-Grey	Green	**1200**	5.34	**2.0**	51	**18.7**	8.5
SHR-2S-1300	Green-Yellow	Green	**1300**	5.78	**2.0**	51	**18.8**	8.5
SHR-2S-1400	Green-Blue	Green	**1400**	6.23	**2.0**	51	**19.3**	8.8
SHR-2S-1600	Green-Black	Green	**1600**	7.12	**2.1**	53	**18.9**	8.6
SHR-2S-1800	Green-Ivory	Green	**1800**	8.01	**2.0**	51	**19.3**	8.8

† weights are approximate

DIMENSIONS: SHR-2N

Model SHR-2N	L in	L mm	W in	W mm	H in	H mm
50–1000	**5**	127	**4**	102	**10 1/4**	260

DIMENSIONS: SHR-2S

Model SHR-2S	L in	L mm	W in	W mm	H in	H mm
800–1800	**6 1/2**	165	**5**	127	**11 1/2**	292

NOTES

- Spring hanger with steel spring and welded steel housing
- Hanger is designed to allow support rod misalignment through a 30-degree arc without contacting the hanger box
- Vertical uplift stopwasher must be added on spring hangers for seismically restrained equipment, duct or piping
- Minimum 50% additional travel to solid
- Springs, compression cups and housings are powder coated

Project:		plan view of hanger locations	1:	6:
Customer:			2:	7:
Consultant:			3:	8:
Dwg No.:	**Rev:**	**Drawn by:**	4:	9:
V-A Project Manager:			5:	10:
			QTY of sets required:	
TAG:		EQUIPMENT:		
COMMENTS:				DATE: