VIBRO-ACOUSTICS®
A Swegon Group company

MEMBER VISCMA

tel: 416-291-7371 1-800-565-8401
fax: 416-291-8049 1-888-811-2264
web: www.vibro-acoustics.com
eml: info@vibro-acoustics.com

2″ (51 mm) Deflection SHB Spring Hanger with Bottom Cup

SHB-2

File No.: DS-SHB2-005 Date: 24 Feb 2016
Supersedes: DS-SHB2-004 Date: 16 Jun 2015

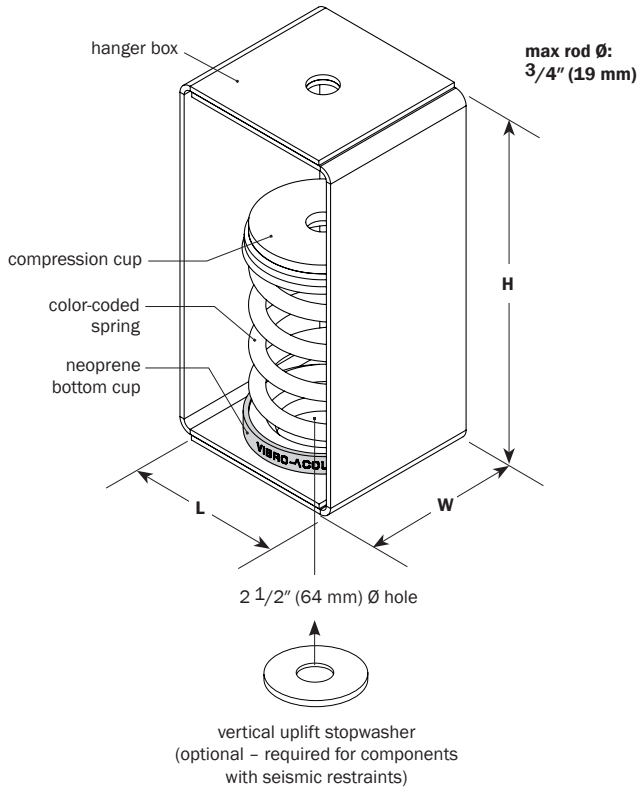

PERFORMANCE

Model	Spring Color	Rated Load		Deflection at rated load		Isolator Weight †	
		lb	kN	in	mm	lb	kg
SHB-2N-50	Red	**50**	0.22	**2.0**	51	**7.2**	3.3
SHB-2N-100	White	**100**	0.44	**2.0**	51	**7.3**	3.3
SHB-2N-200	Orange	**200**	0.89	**2.0**	51	**7.9**	3.6
SHB-2N-300	Green	**300**	1.33	**2.1**	53	**7.9**	3.6
SHB-2N-400	Grey	**400**	1.78	**2.0**	51	**8.1**	3.7
SHB-2N-500	Yellow	**500**	2.22	**2.1**	53	**8.3**	3.7
SHB-2N-600	Blue	**600**	2.67	**2.0**	51	**8.7**	4.0
SHB-2N-800	Black	**800**	3.56	**2.1**	53	**8.4**	3.8
SHB-2N-1000	Ivory	**1000**	4.45	**2.0**	51	**8.8**	4.0

† weights are approximate

DIMENSIONS: SHB-2N

Model	L		W		H	
SHB-2N	in	mm	in	mm	in	mm
50–1000	**5**	127	**4**	102	**10 1/4**	260

NOTES

- Spring hanger with steel spring in a welded steel housing
- Spring sits in a molded neoprene cup which includes a sleeve through the bottom hole
- Hanger is designed to allow support rod misalignment through a 30-degree arc without contacting the hanger box
- Vertical uplift stopwasher must be added on spring hangers for seismically restrained equipment, duct or piping
- Minimum 50% additional travel to solid
- Spring and housing are powder coated
- Compression cup is zinc plated
- All elements are safe at solid loading

Project:	plan view of hanger locations		1:	6:
Customer:			2:	7:
Consultant:			3:	8:
Dwg No.: / **Rev:** / **Drawn by:**			4:	9:
V-A Project Manager:			5:	10:
			QTY of sets required:	
TAG:	EQUIPMENT:			
COMMENTS:				DATE: