VIBRO-ACOUSTICS®
A Swegon Group company

MEMBER VISCMA

tel: 416-291-7371 1-800-565-8401
fax: 416-291-8049 1-888-811-2264
web: www.vibro-acoustics.com
eml: info@vibro-acoustics.com

2″ (50 mm) Deflection CSR Restrained Spring Isolators (Hot Dip Galvanized Housings)

CSR-2A-H

File No.: DS-CSR2-H-003 Date: 3 Mar 2015
Supersedes: DS-CSR2-H-002 Date: 23 Apr 2014

CSR-2A-H (50–4500)

shown with cut-away

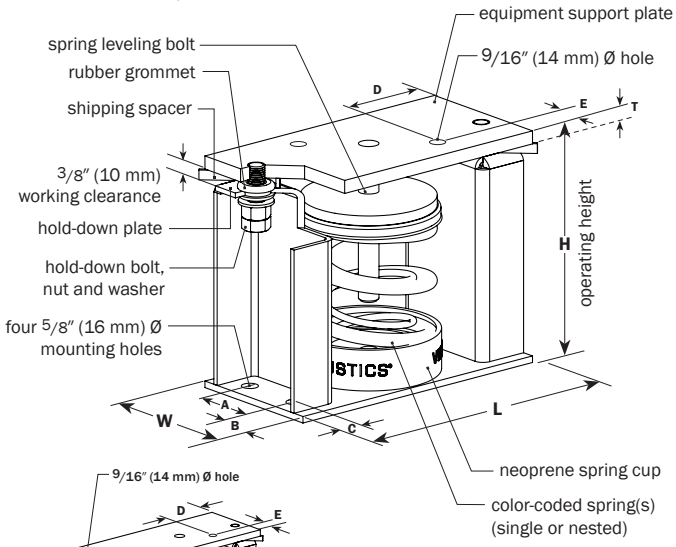

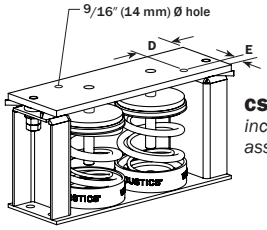

CSR-2A-H (5200–9000)
includes two spring assemblies

D	3 3/8″ (86 mm)
E	1 1/4″ (32 mm)

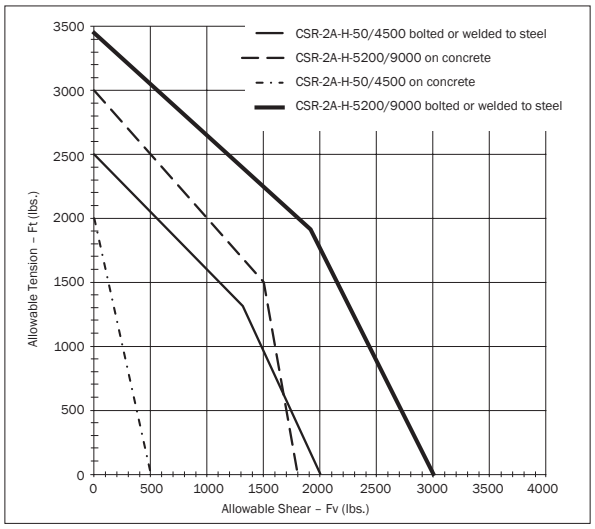

1. Bolted loads are based on using (4) A307 bolts
2. CSR-2A-H-50/4500 concrete loads are based on using (2) 1/2″ Hilti KB TZ anchors diagonally placed at 2″ embedment and 4″ edge distance with 4″ thick 3000 psi concrete
3. CSR-2A-H-5200/9000 concrete loads are based on using (4) 1/2″ Hilti KB TZ anchors at 3 1/4″ embedment and 4 1/4″ edge distance with 6″ thick 3000 psi concrete
4. Ratings for concrete are not valid for seismic applications

PERFORMANCE

Model	Spring Color	Rated Load		Deflection at rated load		Isolator Weight †	
	outer-inner	lb	kN	in	mm	lb	kg
CSR-2A-H-50	Grey	**50**	0.22	**2.0**	51	**23.4**	10.6
CSR-2A-H-100	Blue	**100**	0.44	**2.0**	51	**23.4**	10.6
CSR-2A-H-150	Grey-White	**150**	0.67	**2.0**	51	**24.1**	10.9
CSR-2A-H-200	Blue-White	**200**	0.89	**2.0**	51	**24.1**	10.9
CSR-2A-H-300	Blue-Orange	**300**	1.33	**2.0**	51	**24.7**	11.2
CSR-2A-H-400	Red	**400**	1.78	**2.0**	51	**24.6**	11.2
CSR-2A-H-500	Red-White	**500**	2.22	**2.0**	51	**25.3**	11.5
CSR-2A-H-600	Red-Orange	**600**	2.67	**2.0**	51	**25.9**	11.7
CSR-2A-H-700	Red-Green	**700**	3.11	**2.0**	51	**25.9**	11.7
CSR-2A-H-800	Green	**800**	3.56	**2.0**	51	**25.1**	11.4
CSR-2A-H-900	Green-White	**900**	4.00	**2.0**	51	**25.8**	11.7
CSR-2A-H-1000	Green-Orange	**1000**	4.45	**2.0**	51	**26.4**	12.0
CSR-2A-H-1100	Green-Green	**1100**	4.89	**2.0**	51	**26.4**	12.0
CSR-2A-H-1200	Green-Grey	**1200**	5.34	**2.0**	51	**26.6**	12.1
CSR-2A-H-1400	Green-Blue	**1400**	6.23	**2.0**	51	**27.2**	12.3
CSR-2A-H-1600	Green-Black	**1600**	7.12	**2.0**	51	**26.9**	12.2
CSR-2A-H-1800	Green-Ivory	**1800**	8.01	**2.0**	51	**27.3**	12.4
CSR-2A-H-2000	Black	**2000**	8.90	**2.0**	51	**25.1**	11.4
CSR-2A-H-2200	Black-Orange	**2200**	9.97	**2.0**	51	**26.4**	12.0
CSR-2A-H-2400	Black-Grey	**2400**	10.68	**2.0**	51	**26.6**	12.1
CSR-2A-H-2600	Black-Blue	**2600**	11.57	**2.0**	51	**27.2**	12.3
CSR-2A-H-2800	Black-Black	**2800**	12.46	**2.0**	51	**26.9**	12.2
CSR-2A-H-3200	Black-Red	**3200**	14.23	**2.0**	51	**27.6**	12.5
CSR-2A-H-3700	Blue-Grey	**3700**	16.45	**2.0**	51	**27.8**	12.6
CSR-2A-H-4100	Blue-Black	**4100**	18.24	**2.0**	51	**28.4**	12.9
CSR-2A-H-4500	Blue-Red	**4500**	20.02	**2.0**	51	**29.0**	13.2
CSR-2A-H-5200	(2)Black-Blue	**5200**	23.13	**2.0**	51	**42.6**	19.3
CSR-2A-H-6400	(2)Black-Red	**6400**	28.46	**2.0**	51	**43.4**	19.7
CSR-2A-H-7400	(2)Blue-Grey	**7400**	32.92	**2.0**	51	**44.0**	20.0
CSR-2A-H-8200	(2)Blue-Black	**8200**	36.48	**2.0**	51	**44.8**	20.3
CSR-2A-H-9000	(2)Blue-Red	**9000**	40.03	**2.0**	51	**46.0**	20.9

† weights are approximate

DIMENSIONS

Model	L		W		H		A		B		C		T	
CSR-2A-H	in	mm	in	mm	in	mm	in	mm	in	mm	in	mm	in	mm
50–4500	**11**	279	**5 1/2**	140	**8 7/8**	225	**2 1/2**	64	**1 1/2**	38	**7/8**	22	**1/2**	13
5200–9000	**17**	432	**5 1/2**	140	**8 7/8**	225	**2 1/2**	64	**1 1/2**	38	**7/8**	22	**1/2**	13

NOTES

- Laterally and vertically restrained spring type isolators with housings and heavy top plates for equipment support
- Welded steel construction housings with vertically restraining limit stops
- Top plate and restraining bolts are designed to be out of contact with housing during normal operation
- Neoprene grommets are incorporated to minimize short-circuiting of restraining bolts
- Minimum 50% additional travel to solid
- Minimum k_x/k_y ratio of 0.8
- Housing is hot-dipped galvanized
- All springs are powder-coated
- All components are painted, plated, or coated for outdoors
- If less than 80% of the top plate is covered by the supported equipment, use an additional plate (same thickness as the isolator's equipment support plate) on top of the isolator

Project:		
Customer:		
Consultant:		
Dwg No.:	**Rev:**	**Drawn by:**
V-A Project Manager:		

plan view of mount locations

1:	6:
2:	7:
3:	8:
4:	9:
5:	10:
QTY of sets required:	

TAG: EQUIPMENT:

COMMENTS: DATE: