VIBRO-ACOUSTICS®
A Swegon Group company

MEMBER VISCMA

tel: 416-291-7371 1-800-565-8401
fax: 416-291-8049 1-888-811-2264
web: www.vibro-acoustics.com
eml: info@vibro-acoustics.com

2″ (50 mm) Deflection SFS Seismic Floor Mounted Isolator

SFS-2A

File No.: DS-SFS2-003 Date: 5 Mar 2014
Supersedes: DS-SFS2-002 Date: 22 Oct 2013

SFS-2A (50–3000)

shown with cut-away

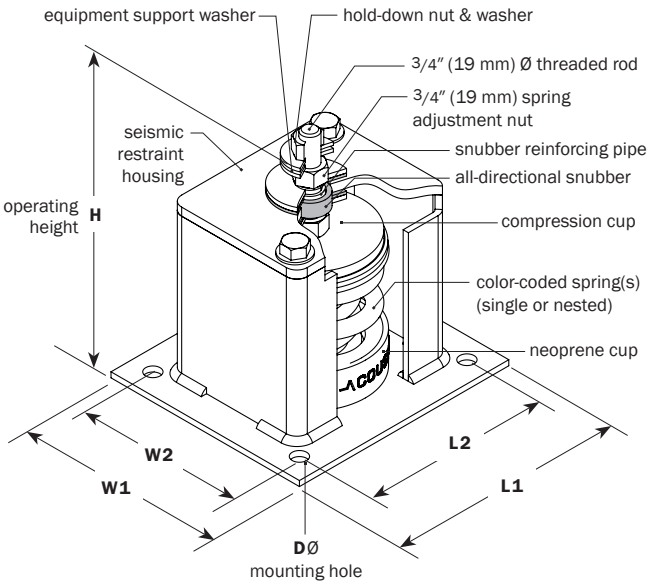

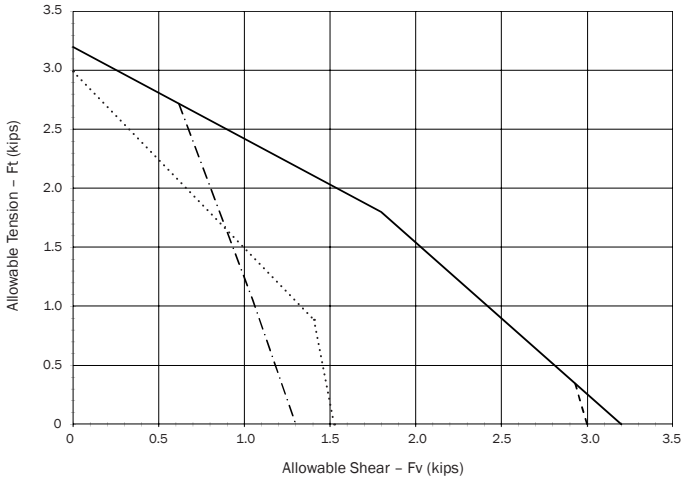

- SFS-2A attached to steel with (4) 5/8″ A307 bolts or welded
- SFS-2A attached to 3000 psi normal weight concrete with (4) 5/8″ Hilti KBTZ anchors at 4″ embedment on a 6″ slab within 8.5″ edge distance **or** with (4) 5/8″ Hilti HIS-N Carbon steel insert with Hilti HIT-HY 200 Safe Set System at 6-3/4″ embedment on a 9″ slab with 5″ edge distance
- SFS-2A attached to 3000 psi normal weight concrete with (4) 1/2″ Hilti KBTZ anchors at 2″ embedment on a 4″ slab with 5″ edge distance
- SFS-2A attached to 3000 psi normalweight concrete with (2) 5/8″ Hilti KBTZ anchors at 4″ embedment on a 6″ slab with 6-1/2″ edge distance.

PERFORMANCE

Model	Spring Color outer-inner	Rated Load lb	kN	Deflection at rated load in	mm	Isolator Weight † lb	kg
SFS-2A-50	Grey	**50**	0.22	**2.0**	51	**32.2**	14.6
SFS-2A-100	Blue	**100**	0.44	**2.0**	51	**32.2**	14.6
SFS-2A-150	Grey-White	**150**	0.67	**2.0**	51	**32.9**	15.0
SFS-2A-200	Blue-White	**200**	0.89	**2.0**	51	**32.9**	15.0
SFS-2A-300	Blue-Orange	**300**	1.33	**2.0**	51	**33.5**	15.2
SFS-2A-400	Red	**400**	1.78	**2.0**	51	**33.4**	15.2
SFS-2A-500	Red-White	**500**	2.22	**2.0**	51	**34.1**	15.5
SFS-2A-600	Red-Orange	**600**	2.67	**2.0**	51	**34.7**	15.8
SFS-2A-700	Red-Green	**700**	3.11	**2.0**	51	**34.7**	15.8
SFS-2A-800	Green	**800**	3.56	**2.0**	51	**33.9**	15.4
SFS-2A-900	Green-White	**900**	4.00	**2.0**	51	**34.6**	15.7
SFS-2A-1000	Green-Orange	**1000**	4.45	**2.0**	51	**35.2**	16.0
SFS-2A-1100	Green-Green	**1100**	4.89	**2.0**	51	**35.2**	16.0
SFS-2A-1200	Green-Grey	**1200**	5.34	**2.0**	51	**35.4**	16.1
SFS-2A-1400	Green-Blue	**1400**	6.23	**2.0**	51	**36.0**	16.4
SFS-2A-1600	Green-Black	**1600**	7.12	**2.0**	51	**35.7**	16.2
SFS-2A-1800	Green-Ivory	**1800**	8.01	**2.0**	51	**36.1**	16.4
SFS-2A-2000	Black	**2000**	8.90	**2.0**	51	**33.9**	15.4
SFS-2A-2200	Black-Orange	**2200**	9.97	**2.0**	51	**35.2**	16.0
SFS-2A-2400	Black-Grey	**2400**	10.68	**2.0**	51	**35.4**	16.1
SFS-2A-2600	Black-Blue	**2600**	11.57	**2.0**	51	**36.0**	16.4
SFS-2A-2800	Black-Black	**2800**	12.46	**2.0**	51	**35.7**	16.2
SFS-2A-3000	Black-Ivory	**3000**	13.34	**2.0**	51	**36.4**	16.5

† weights are approximate

DIMENSIONS

Model SFS-2A	W2 in	mm	W1 in	mm	L2 in	mm	L1 in	mm
50–3000	**7**	178	**9**	229	**8**	203	**10**	254
	H in	mm	**Adjustment Nut** in	mm	**Threaded Rod Ø** in	mm	**D Ø** in	mm
	8 3/4	222	**3/4**	19	**3/4**	19	**11/16**	17

NOTES

- Seismically restrained, laterally stable, open spring type isolator with welded steel construction housings and support for bolting to equipment.
- Springs supported with neoprene cup for noise isolation.
- Mount includes integral all-directional snubber with elastomeric components preventing metal-to-metal contact and with 1/8″ (3 mm) clearance under normal operation.
- Minimum 50% additional travel to solid
- Minimum k_x/k_y ratio of 0.8
- Housing powder-coated; hardware zinc-plated; springs powder-coated; hot-dipped galvanized housing is an option.

Project:		plan view of mount locations	1:	6:
Customer:			2:	7:
Consultant:			3:	8:
Dwg No.:	**Rev:**	**Drawn by:**	4:	9:
V-A Project Manager:			5:	10:
			QTY of sets required:	
TAG:		EQUIPMENT:		
COMMENTS:				DATE: