VIBRO-ACOUSTICS®
A Swegon Group company

MEMBER VISCMA

tel: 416-291-7371 1-800-565-8401
fax: 416-291-8049 1-888-811-2264
web: www.vibro-acoustics.com
eml: info@vibro-acoustics.com

4" (102 mm) Deflection SH Spring Hangers

SH-4

File No.: DS-SH4-001 Date: 14 Oct 2016
Supersedes: New Date: New

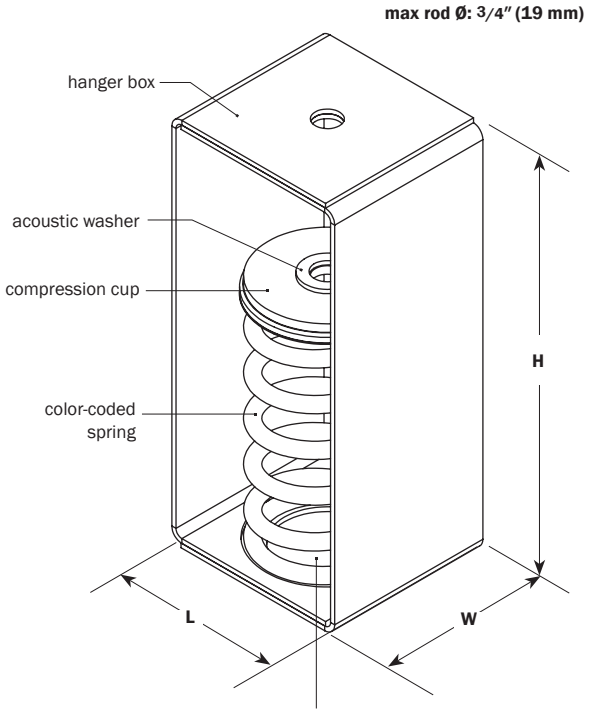

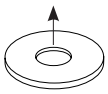

vertical uplift stopwasher
(optional – required for components with seismic restraints)

PERFORMANCE

Model	Spring Color	Rated Load		Deflection at rated load		Isolator Weight †	
		lb	kN	**in**	mm	**lb**	kg
SH-4N-200	Blue	**200**	0.89	**4.0**	102	**10.7**	4.9
SH-4N-400	Red	**400**	1.78	**4.0**	102	**10.9**	5.0
SH-4N-600	White	**600**	2.67	**4.0**	102	**11.2**	5.1

† weights are approximate

DIMENSIONS

Model	L		W		H	
SH-4N	**in**	mm	**in**	mm	**in**	mm
200–600	**5 1/2**	140	**5**	127	**12 1/2**	318

NOTES

- Spring hanger with steel spring and welded steel housing
- Hanger is designed to allow support rod misalignment through a 30-degree arc without contacting the hanger box.
- Vertical uplift stopwasher must be added on spring hangers for seismically restrained equipment, duct or piping
- Minimum 50% additional travel to solid
- Springs, compression cups and housings are powder coated
- Higher capacities are available. Contact Vibro-Acoustics for more information.

Project:			plan view of hanger locations	1: / 6:
Customer:				2: / 7:
Consultant:				3: / 8:
Dwg No.:	**Rev:**	**Drawn by:**		4: / 9:
V-A Project Manager:				5: / 10:
				QTY of sets required:
TAG:			EQUIPMENT:	
COMMENTS:				DATE: