VIBRO-ACOUSTICS®
A Swegon Group company

MEMBER VISCMA

tel: 416-291-7371 1-800-565-8401
fax: 416-291-8049 1-888-811-2264
web: www.vibro-acoustics.com
eml: info@vibro-acoustics.com

1″ (25 mm) Deflection SFS Seismic Floor Mounted Isolator

SFS-SA

File No.: DS-SFSSA-012 Date: 13 Mar 2015
Supersedes: DS-SFSSA-011 Date: 15 May 2013

SFS-SA (30–400)

shown with cut-away

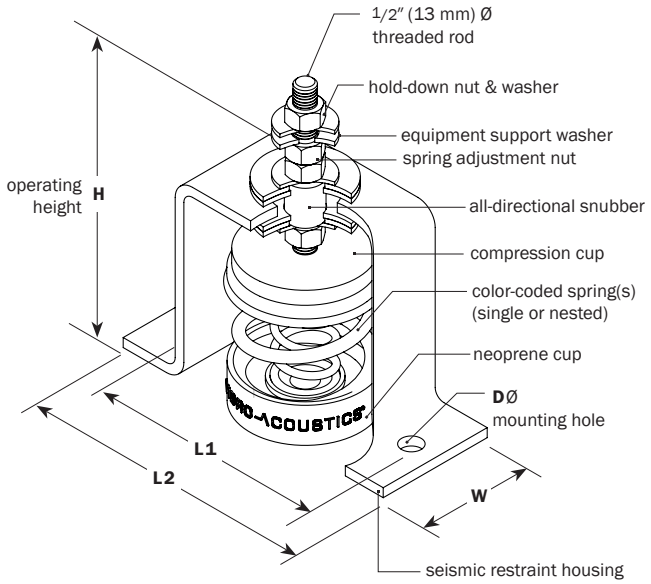

SFS-SA (500–1000)

shown with cut-away

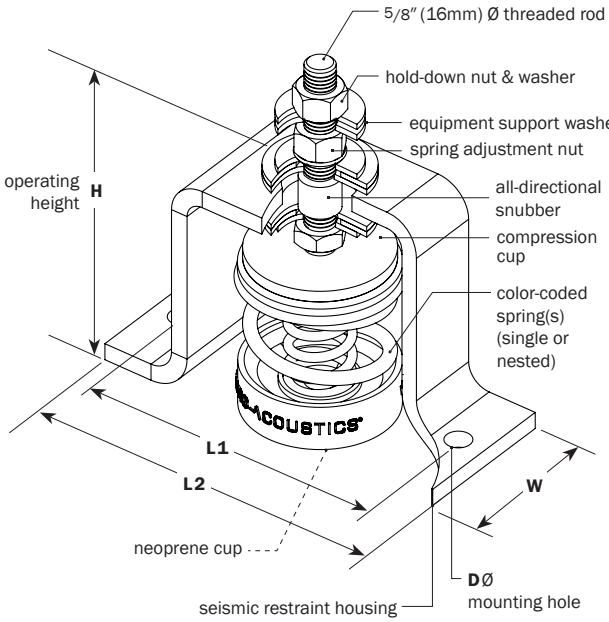

PERFORMANCE

Model	Spring Color outer-inner	Rated Load lb	Rated Load kN	Deflection at rated load in	Deflection at rated load mm	Isolator Weight lb	Isolator Weight kg
SFS-SA-30	Grey	**30**	0.13	**1.0**	25	**5.7**	2.6
SFS-SA-45	Grey-White	**45**	0.20	**1.0**	25	**5.8**	2.6
SFS-SA-60	Grey-Yellow	**60**	0.27	**1.0**	25	**5.8**	2.6
SFS-SA-75	Grey-Orange	**75**	0.33	**1.0**	25	**5.8**	2.6
SFS-SA-100	Orange	**100**	0.44	**1.0**	25	**5.9**	2.7
SFS-SA-115	Orange-White	**115**	0.51	**1.0**	25	**5.9**	2.7
SFS-SA-130	Orange-Yellow	**130**	0.58	**1.0**	25	**6.0**	2.7
SFS-SA-145	Orange-Orange	**145**	0.64	**1.0**	25	**6.0**	2.7
SFS-SA-160	Orange-Red	**160**	0.71	**1.0**	25	**6.0**	2.7
SFS-SA-200	White	**200**	0.89	**1.0**	25	**5.9**	2.7
SFS-SA-215	White-White	**215**	0.96	**1.0**	25	**6.0**	2.7
SFS-SA-230	White-Yellow	**230**	1.02	**1.0**	25	**6.0**	2.7
SFS-SA-245	White-Orange	**245**	1.09	**1.0**	25	**6.0**	2.7
SFS-SA-260	White-Red	**260**	1.16	**1.0**	25	**6.0**	2.7
SFS-SA-300	White-Blue	**300**	1.33	**1.0**	25	**6.1**	2.8
SFS-SA-350	White-Black	**350**	1.56	**1.0**	25	**6.1**	2.8
SFS-SA-400	White-Grey	**400**	1.80	**1.0**	25	**6.2**	2.8
SFS-SA-500	Blue	**500**	2.22	**1.0**	25	**8.1**	3.7
SFS-SA-545	Blue-Orange	**545**	2.42	**1.0**	25	**8.2**	3.7
SFS-SA-600	Blue-Blue	**600**	2.67	**1.0**	25	**8.2**	3.7
SFS-SA-650	Blue-Black	**650**	2.89	**1.0**	25	**8.2**	3.7
SFS-SA-700	Blue-Grey	**700**	3.11	**1.0**	25	**8.3**	3.7
SFS-SA-800	Green	**800**	3.56	**1.0**	25	**8.5**	3.9
SFS-SA-845	Green-Orange	**845**	3.76	**1.0**	25	**8.6**	3.9
SFS-SA-900	Green-Blue	**900**	4.00	**1.0**	25	**8.6**	3.9
SFS-SA-950	Green-Black	**950**	4.23	**1.0**	25	**8.6**	3.9
SFS-SA-1000	Green-Grey	**1000**	4.44	**1.0**	25	**8.8**	4.0

DIMENSIONS

Model SFS-SA	L1 in	L1 mm	L2 in	L2 mm	W in	W mm	H in	H mm	Adjustment Nut in	Adjustment Nut mm	Threaded Rod Ø in	Threaded Rod Ø mm	D Ø in	D Ø mm
30–400	**6 1/8**	156	**7 1/2**	191	**3**	76	**6 1/2**	165	**1/2**	13	**1/2**	13	**9/16**	14
500–1000	**6 3/4**	171	**8**	203	**3 1/4**	83	**6 1/2**	165	**5/8**	16	**5/8**	16	**9/16**	14

NOTES

- Seismically restrained, laterally stable, open spring type isolator with support for bolting to equipment.
- Springs supported with neoprene cup for noise isolation.
- Mount includes integral all-directional snubber with elastomeric components preventing metal-to-metal contact and with 1/8″ (3 mm) clearance under normal operation.
- Minimum 50% additional travel to solid
- Minimum k_x/k_y ratio of 0.8
- Housing hot-dip galvanized; hardware zinc-plated; springs powder coated

Project:		plan view of mount locations	1:	6:
Customer:			2:	7:
Consultant:			3:	8:
Dwg No.:	**Rev:**	**Drawn by:**	4:	9:
V-A Project Manager:			5:	10:
			QTY of sets required:	
TAG:		EQUIPMENT:		
COMMENTS:				DATE: