VIBRO-ACOUSTICS®
A Swegon Group company

MEMBER VISCMA

tel: 416-291-7371 1-800-565-8401
fax: 416-291-8049 1-888-811-2264

web: www.vibro-acoustics.com
eml: info@vibro-acoustics.com

1″ (25 mm) Deflection PSH Precompressed Spring Hangers

PSH-SN

File No.: DS-PSHSN-007 Date: 23 Jul 2012
Supersedes: DS-PSHSN-006 Date: 16 Sep 2011

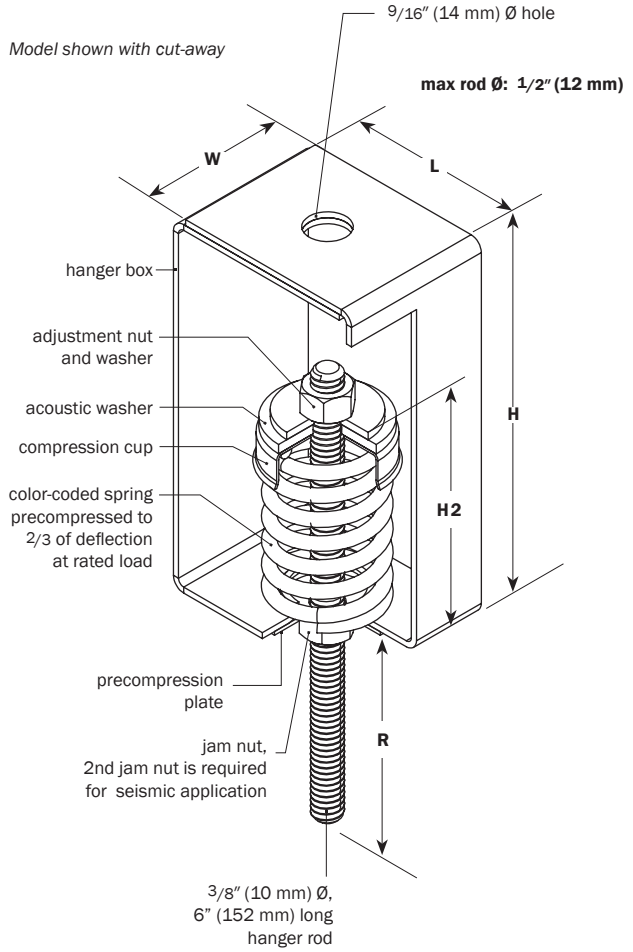

PERFORMANCE

Model	Spring Color	Rated Load lb	Rated Load kN	Deflection at rated load in	Deflection at rated load mm	Isolator Weight † lb	Isolator Weight † kg
PSH-SN-15	White	**15**	0.07	**1.0**	25	**1.6**	0.7
PSH-SN-30	Yellow	**30**	0.13	**1.0**	25	**1.7**	0.8
PSH-SN-45	Orange	**45**	0.20	**1.0**	25	**1.6**	0.7
PSH-SN-60	Red	**60**	0.27	**1.0**	25	**1.7**	0.8
PSH-SN-100	Blue	**100**	0.44	**1.0**	25	**1.8**	0.8
PSH-SN-150	Black	**150**	0.67	**1.0**	25	**1.8**	0.8
PSH-SN-200	Grey	**200**	0.90	**1.0**	25	**1.9**	0.9

for additional loads, see PSH-1 † weights are approximate

DIMENSIONS

Model PSH-SN	L in	L mm	W in	W mm	H in	H mm	H2* in	H2* mm	R in	R mm
15–200	**2 3/4**	70	**2**	51	**5**	127	**2 9/16**	65	**3**	76

* precompressed height

NOTES

- Spring hanger with steel spring and welded steel housing
- Springs are precompressed to 2/3 of deflection at rated load
- Precompression plate serves as vertical uplift stopwasher for seismically restrained equipment, duct or piping. A second jam nut must be added to lock it in place
- Coupling (by others) is required for attaching to support rod
- Minimum 50% additional travel to solid
- Springs are powder-coated, housings and cups are galvanized
- All elements safe at solid loading
- All hardware zinc-plated, Grade 2 minimum

Project:		plan view of hanger locations	1:	6:
Customer:			2:	7:
Consultant:			3:	8:
Dwg No.:	**Rev:**	**Drawn by:**	4:	9:
V-A Project Manager:			5:	10:
			QTY of sets required:	
TAG:		EQUIPMENT:		
COMMENTS:				DATE: