VIBRO-ACOUSTICS®
A Swegon Group company

MEMBER VISCMA

tel: 416-291-7371 1-800-565-8401
fax: 416-291-8049 1-888-811-2264

web: www.vibro-acoustics.com
eml: info@vibro-acoustics.com

1″ (25 mm) Deflection SHRB Spring Hanger with Neoprene and Bottom Cup

SHRB-1

File No.: DS-SHRB1-006 Date: 24 Feb 2016
Supersedes: DS-SHRB1-005 Date: 04 Jan 2016

Model shown with cut-away

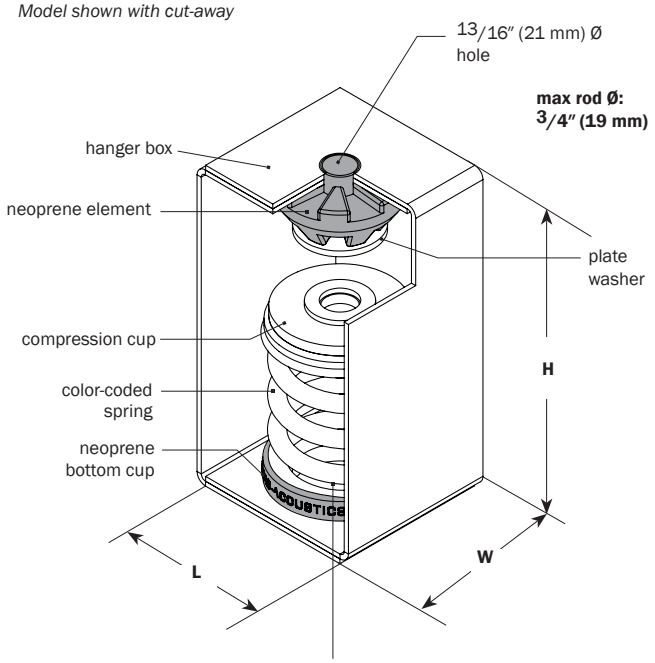

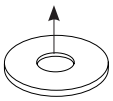

vertical uplift stopwasher
(optional – required for components with seismic restraints)

PERFORMANCE

Model	Spring Color	Element Color	Rated Load lb	Rated Load kN	Deflection at rated load in	Deflection at rated load mm	Isolator Weight † lb	Isolator Weight † kg
SHRB-1N-50*	Blue	Green	**50**	0.22	**1.0**	25	**5.5**	2.5
SHRB-1N-100*	White	Green	**100**	0.44	**1.0**	25	**5.8**	2.6
SHRB-1N-150*	Orange	Green	**150**	0.67	**1.0**	25	**5.7**	2.6
SHRB-1N-200*	Grey	Green	**200**	0.89	**1.0**	25	**6.0**	2.7
SHRB-1N-300	Black	Green	**300**	1.33	**1.0**	25	**6.2**	2.8
SHRB-1N-400	Green	Red	**400**	1.78	**1.0**	25	**6.2**	2.8
SHRB-1N-500	Yellow	Black	**500**	2.22	**1.0**	25	**6.6**	3.0
SHRB-1N-600	Red	Blue	**600**	2.67	**1.0**	25	**6.7**	3.0
SHRB-1N-800	Blue	Blue	**800**	3.56	**1.0**	25	**6.9**	3.1

* for smaller hanger box, see SHRB-SN † weights are approximate

DIMENSIONS: SHRB-1N

Model SHRB-1N	L in	L mm	W in	W mm	H in	H mm
50–800	**4 1/4**	108	**4**	102	**8 1/4**	210

NOTES

- Spring hanger with steel spring and neoprene element in series in a welded steel housing
- Spring sits in a molded neoprene cup which includes a sleeve through the bottom hole
- Hanger is designed to allow support rod misalignment through a 30-degree arc without contacting the hanger box
- Vertical uplift stopwasher must be added on spring hangers for seismically restrained equipment, duct or piping
- Minimum 50% additional travel to solid
- Spring and housing are powder coated, hardware is zinc-plated
- All elements are safe at solid loading

Project:		plan view of hanger locations	1:	6:
Customer:			2:	7:
Consultant:			3:	8:
Dwg No.:	**Rev:**	**Drawn by:**	4:	9:
V-A Project Manager:			5:	10:
			QTY of sets required:	
TAG:		EQUIPMENT:		
COMMENTS:				DATE: