VIBRO-ACOUSTICS®
A Swegon Group company
MEMBER VISCMA

tel: 416-291-7371 1-800-565-8401
fax: 416-291-8049 1-888-811-2264
web: www.vibro-acoustics.com
eml: info@vibro-acoustics.com

HCS Base-Mounted Thrust Restraints

HCS-1

File No.: DS-HCS1-001 Date: 25 Nov 2010
Supersedes: New Date: New

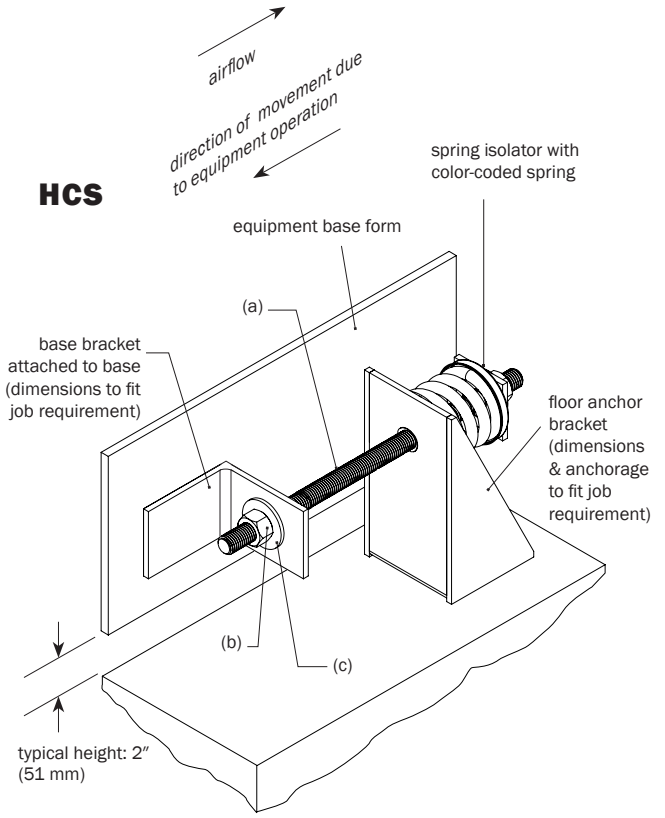

(a) 12″ (305 mm) long threaded rod
(b) Full hex nuts (4 per isolator)
(c) USS washer (3 per isolator)

PERFORMANCE FOR PAIR OF ISOLATORS

Model	Spring Color	Thrust Load* per Pair of Isolators lb	kN	Isolator Weight for pair † lb	kg
HCS-1N-50	Blue	**25**	0.11	**40.2**	18.3
HCS-1N-100	White	**50**	0.22	**40.2**	18.3
HCS-1N-150	Orange	**75**	0.33	**40.2**	18.3
HCS-1N-200	Gray	**100**	0.44	**40.2**	18.3
HCS-1N-300	Black	**150**	0.67	**40.4**	18.4
HCS-1N-400	Green	**200**	0.89	**40.4**	18.4
HCS-1N-500	Yellow	**250**	1.11	**40.4**	18.4
HCS-1N-600	Red	**300**	1.33	**40.4**	18.4
HCS-1N-800	Blue	**400**	1.80	**40.6**	18.5
HCS-1NS-1000	Blue	**500**	2.22	**46.0**	20.9
HCS-1NS-1500	Red	**750**	3.34	**46.4**	21.1

*For higher thrust loads see HCSP-1 † weights are approximate

ROD DIMENSION: HCS-1N

Model HCS-1N	Rod Ø in	mm
50–800	1/2	13

ROD DIMENSION: HCS-1NS

Model HCS-1NS	Rod Ø in	mm
1000–1500	5/8	16

NOTES

- Two assemblies required per installation
- Used for base mounted air-moving equipment
- All parts except attachment hardware are supplied by Vibro-Acoustics
- Minimum spring k_x/k_y ratio of 0.8
- All elements safe at solid loading
- All hardware zinc-plated, Grade 2 minimum
- All springs enamel powder-coated
- Brackets prime-painted
- Thrust load based on min. spring deflection of 0.25″

PLAN VIEW DETAIL

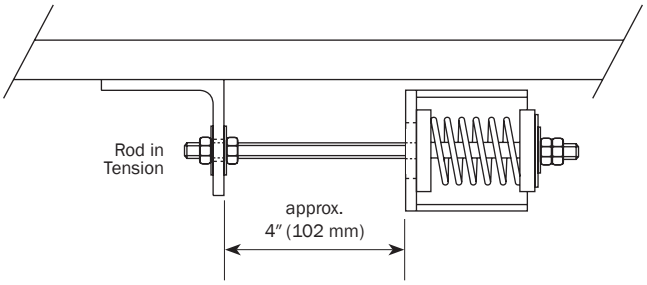

Project:	Model: QTY of sets required:
Customer:	DWN: CHK: REV: DATE:
Consultant:	TAG: UNIT:
V-A Project No.:	COMMENTS:
V-A Project Manager:	