VIBRO-ACOUSTICS®
A Swegon Group company

MEMBER VISCMA

tel: 416-291-7371 1-800-565-8401
fax: 416-291-8049 1-888-811-2264
web: www.vibro-acoustics.com
eml: info@vibro-acoustics.com

1″ (25 mm) Deflection PSHR Precompressed Spring Hangers with Neoprene

PSHR-1

File No.: DS-PSHR1-011 Date: 6 May 2016
Supersedes: DS-PSHR1-009 Date: 24 Feb 2016

PSHR-1N

shown with cut-away

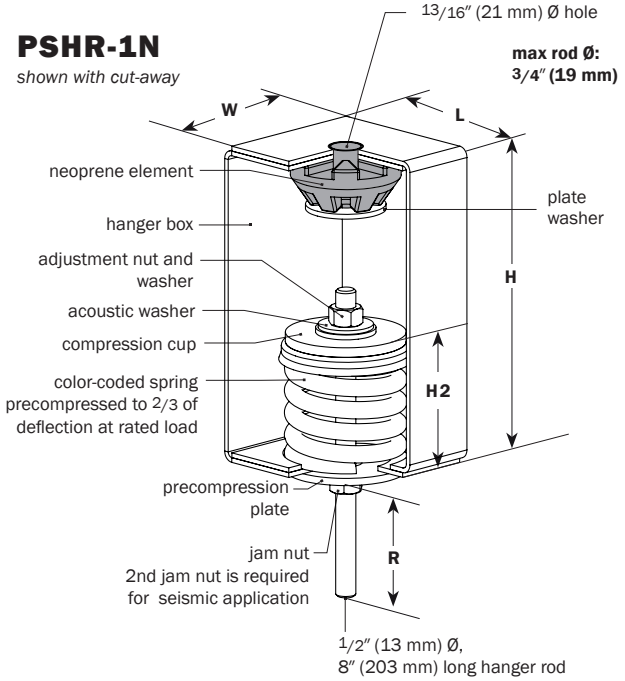

PSHR-1S

shown with cut-away

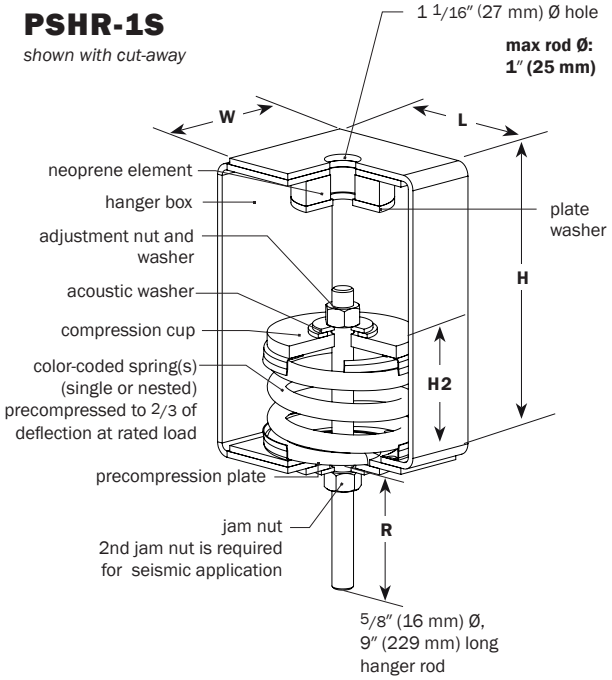

PERFORMANCE

Model	Spring Color outer-inner	Element Color	Rated Load lb	Rated Load kN	Deflection at rated load in	Deflection at rated load mm	Isolator Weight † lb	Isolator Weight † kg
PSHR-1N-50*	Blue	Green	**50**	0.22	**1.0**	25	**5.9**	2.7
PSHR-1N-100*	White	Green	**100**	0.44	**1.0**	25	**6.2**	2.8
PSHR-1N-150*	Orange	Green	**150**	0.67	**1.0**	25	**6.2**	2.8
PSHR-1N-200*	Green	Green	**200**	0.89	**1.0**	25	**6.4**	2.9
PSHR-1N-300	Black	Green	**300**	1.33	**1.0**	25	**6.6**	3.0
PSHR-1N-400	Green	Red	**400**	1.78	**1.0**	25	**6.6**	3.0
PSHR-1N-500	Yellow	Black	**500**	2.22	**1.0**	25	**7.0**	3.2
PSHR-1N-600	Red	Blue	**600**	2.67	**1.0**	25	**7.1**	3.2
PSHR-1N-800	Blue	Blue	**800**	3.56	**1.0**	25	**7.3**	3.3
PSHR-1S-900	Orange/Green	Green	**900**	4.00	**1.0**	25	**14.6**	6.6
PSHR-1S-1000	White	Green	**1000**	4.45	**1.0**	25	**13.9**	6.3
PSHR-1S-1100	White/White	Green	**1100**	4.89	**1.0**	25	**14.6**	6.6
PSHR-1S-1200	White/Grey	Green	**1200**	5.34	**1.0**	25	**14.9**	6.7
PSHR-1S-1300	White/Black	Green	**1300**	5.78	**1.0**	25	**15.0**	6.8
PSHR-1S-1400	White/Green	Green	**1400**	6.23	**1.0**	25	**15.1**	6.8
PSHR-1S-1500	White/Yellow	Green	**1500**	6.67	**1.0**	25	**15.4**	7.0
PSHR-1S-1600	White/Red	Green	**1600**	7.12	**1.0**	25	**15.5**	7.0
PSHR-1S-1800	White/Blue	Green	**1800**	8.01	**1.0**	25	**15.7**	7.1

*for smaller isolator, see PSHR-SN † weights are approximate

DIMENSIONS: PSHR-1N

Model PSHR-1N	L in	L mm	W in	W mm	H in	H mm	H2* in	H2* mm	R in	R mm
50–800	**4 1/4**	108	**4**	102	**8 1/4**	210	**3 3/4**	95	**3 1/2**	89

* precompressed height

DIMENSIONS: PSHR-1S

Model PSHR-1S	L in	L mm	W in	W mm	H in	H mm	H2* in	H2* mm	R in	R mm
900–1800	**5 1/2**	140	**4 1/2**	114	**9**	229	**4 1/8**	105	**3 1/2**	89

* precompressed height

NOTES

- Spring hanger with steel spring and welded steel housing.
- Springs are precompressed to 2/3 of deflection at rated load
- Hanger is designed to allow support rod misalignment through a 30-degree arc without contacting the hanger box
- Precompression plate serves as vertical uplift stopwasher for seismically restrained equipment, duct or piping. A second jam nut must be added to lock it in place.
- Coupling (by others) is required for attaching to support rod
- Minimum 50% additional travel to solid
- All elements safe at solid loading
- All hardware zinc-plated, Grade 2 minimum
- Springs and hanger boxes are powder-coated

Project:		plan view of hanger locations	1:	6:
Customer:			2:	7:
Consultant:			3:	8:
Dwg No.:	**Rev:**	**Drawn by:**	4:	9:
V-A Project Manager:			5:	10:
			QTY of sets required:	
TAG:		EQUIPMENT:		
COMMENTS:				DATE: