VIBRO-ACOUSTICS®
A Swegon Group company

MEMBER VISCMA

tel: 416-291-7371 1-800-565-8401
fax: 416-291-8049 1-888-811-2264
web: www.vibro-acoustics.com
eml: info@vibro-acoustics.com

1″ (25 mm) Deflection FS Free Spring Floor Mounted Isolators

FS-SA

File No.: DS-FSSA-009 Date: 15 May 2013
Supersedes: DS-FSSA-008 Date: 31 Dec 2012

FS-SA (30–400)

shown with cut-away

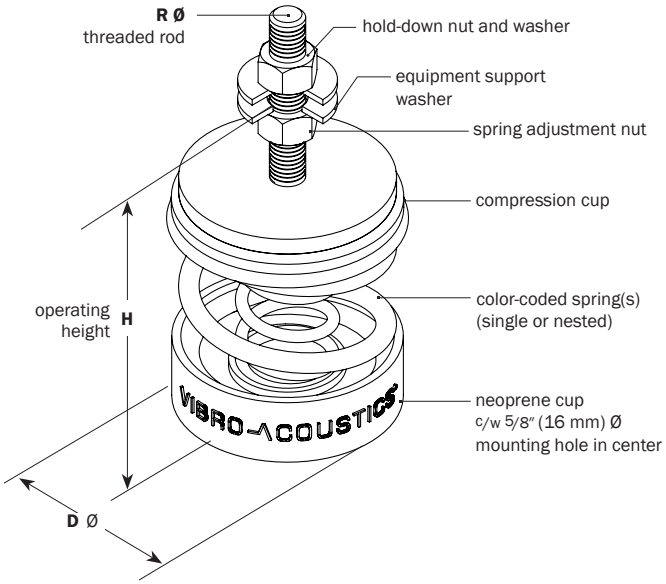

FS-SA (500–1000)

shown with cut-away

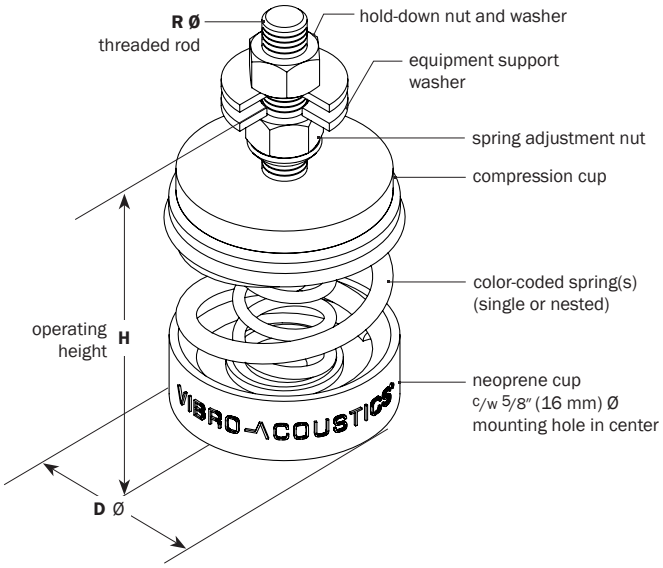

PERFORMANCE

Model	Spring Color outer-inner	Rated Load lb	kN	Deflection at rated load in	mm	Isolator Weight lb	kg
FS-SA-30	Grey	**30**	0.13	**1.0**	25	**2.3**	1.1
FS-SA-45	Grey-White	**45**	0.20	**1.0**	25	**2.4**	1.1
FS-SA-60	Grey-Yellow	**60**	0.27	**1.0**	25	**2.4**	1.1
FS-SA-75	Grey-Orange	**75**	0.33	**1.0**	25	**2.5**	1.1
FS-SA-100	Orange	**100**	0.44	**1.0**	25	**2.5**	1.1
FS-SA-115	Orange-White	**115**	0.51	**1.0**	25	**2.6**	1.2
FS-SA-130	Orange-Yellow	**130**	0.58	**1.0**	25	**2.6**	1.2
FS-SA-145	Orange-Orange	**145**	0.64	**1.0**	25	**2.6**	1.2
FS-SA-160	Orange-Red	**160**	0.71	**1.0**	25	**2.6**	1.2
FS-SA-200	White	**200**	0.89	**1.0**	25	**2.5**	1.2
FS-SA-215	White-White	**215**	0.96	**1.0**	25	**2.6**	1.2
FS-SA-230	White-Yellow	**230**	1.02	**1.0**	25	**2.6**	1.2
FS-SA-245	White-Orange	**245**	1.09	**1.0**	25	**2.7**	1.2
FS-SA-260	White-Red	**260**	1.16	**1.0**	25	**2.7**	1.2
FS-SA-300	White-Blue	**300**	1.33	**1.0**	25	**2.7**	1.2
FS-SA-350	White-Black	**350**	1.56	**1.0**	25	**2.7**	1.2
FS-SA-400	White-Grey	**400**	1.80	**1.0**	25	**2.8**	1.3
FS-SA-500	Blue	**500**	2.22	**1.0**	25	**2.8**	1.3
FS-SA-545	Blue-Orange	**545**	2.42	**1.0**	25	**2.9**	1.3
FS-SA-600	Blue-Blue	**600**	2.67	**1.0**	25	**2.9**	1.3
FS-SA-650	Blue-Black	**650**	2.89	**1.0**	25	**3.0**	1.4
FS-SA-700	Blue-Grey	**700**	3.11	**1.0**	25	**3.0**	1.4
FS-SA-800	Green	**800**	3.56	**1.0**	25	**3.5**	1.5
FS-SA-845	Green-Orange	**845**	3.76	**1.0**	25	**3.6**	1.6
FS-SA-900	Green-Blue	**900**	4.00	**1.0**	25	**3.6**	1.6
FS-SA-950	Green-Black	**950**	4.23	**1.0**	25	**3.8**	1.7
FS-SA-1000	Green-Grey	**1000**	4.44	**1.0**	25	**4.1**	1.9

For additional loads, see FS-1 † weights are approximate

DIMENSIONS

Model FS-SA	D Ø in	mm	H in	mm	R Ø in	mm
30–400	**3 1/8**	79	**5**	127	**1/2**	13
500–1000	**3 1/8**	79	**5**	127	**5/8**	16

NOTES

- Free standing, laterally stable, unhoused spring type isolator with levelling nuts to position and secure the equipment
- Minimum 50% additional travel to solid
- Minimum k_x/k_y ratio of 0.8
- All elements safe at solid loading
- All hardware zinc-plated, Grade 2 minimum
- All springs powder coated
- Operating height shown is maximum recommended height.
- When loading isolators and during isolator spring adjustment, ensure that the spring(s) is loaded centered as installed and the spring compression cup is perpendicular to the spring in order to prevent the isolator from bending over.

Project:			plan view of mount locations	1: / 6:
Customer:				2: / 7:
Consultant:				3: / 8:
Dwg No.:	**Rev:**	**Drawn by:**		4: / 9:
V-A Project Manager:				5: / 10:
				QTY of sets required:
TAG:			EQUIPMENT:	
COMMENTS:				DATE: