VIBRO-ACOUSTICS®
A Swegon Group company

MEMBER VISCMA

tel: 416-291-7371 1-800-565-8401
fax: 416-291-8049 1-888-811-2264
web: www.vibro-acoustics.com
eml: info@vibro-acoustics.com

1″ (25 mm) Deflection PSHRB Precompressed Spring Hanger with Neoprene and Bottom Cup

PSHRB-SN

File No.: DS-PSHRBSN-005 Date: 24 Feb 2016
Supersedes: DS-PSHRBSN-004 Date: 23 Jul 2012

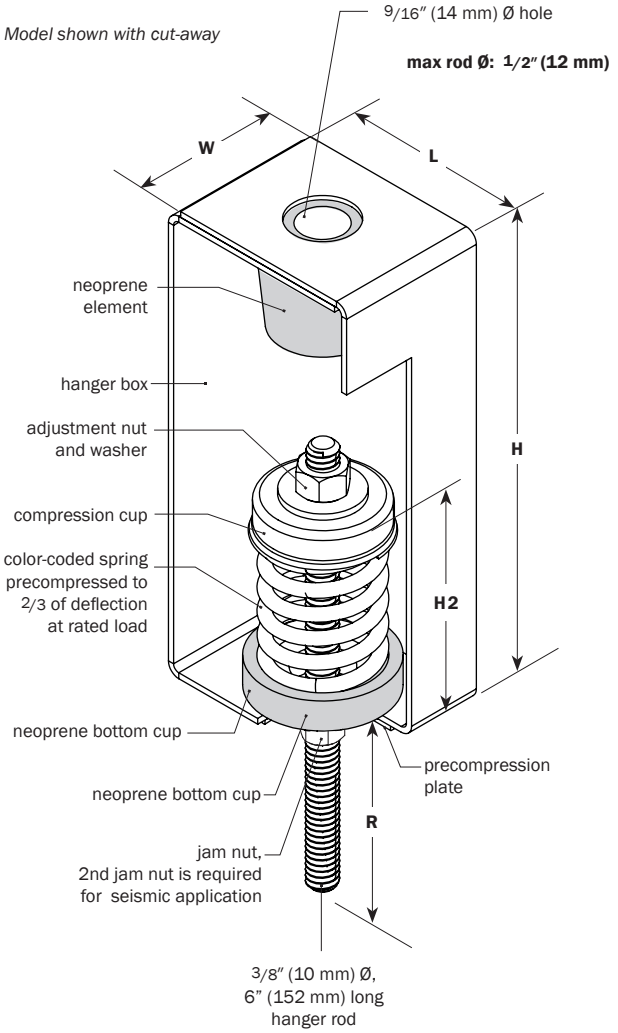

PERFORMANCE

Model	Spring Color	Element Color	Rated Load lb	Rated Load kN	Deflection at rated load in	Deflection at rated load mm	Isolator Weight † lb	Isolator Weight † kg
PSHRB-SN-15	White	Org	**15**	0.07	**1.0**	25	**1.3**	0.6
PSHRB-SN-30	Yellow	Org	**30**	0.13	**1.0**	25	**1.3**	0.6
PSHRB-SN-45	Orange	Blu	**45**	0.20	**1.0**	25	**1.4**	0.6
PSHRB-SN-60	Red	Blu	**60**	0.27	**1.0**	25	**1.4**	0.6
PSHRB-SN-100	Blue	Grn	**100**	0.44	**1.0**	25	**1.4**	0.7
PSHRB-SN-150	Black	Red	**150**	0.67	**1.0**	25	**1.4**	0.7
PSHRB-SN-200	Grey	Black	**200**	0.90	**1.0**	25	**1.5**	0.7

for additional loads, see PSHR-1 † weights are approximate

DIMENSIONS

Model PSHRB-SN	L in	L mm	W in	W mm	H in	H mm	H2* in	H2* mm	R in	R mm
15–200	**2 3/4**	70	**2**	51	**5**	127	**2 9/16**	65	**3**	76

* precompressed height

NOTES

- Spring hanger with steel spring and welded steel housing
- Spring is precompressed to 2/3 of deflection at rated load
- Spring sits in a molded neoprene cup which includes a sleeve through the bottom hole
- Precompression plate serves as vertical uplift stopwasher for seismically restrained equipment, duct or piping. A second jam nut must be added to lock it in place
- Coupling (by others) is required for attaching to support rod
- Minimum 50% additional travel to solid
- Springs are powder coated, housings and compression cups are galvanized
- All elements safe at solid loading
- All hardware zinc-plated, Grade 2 minimum

Project:		plan view of hanger locations	1:	6:
Customer:			2:	7:
Consultant:			3:	8:
Dwg No.:	**Rev:**	**Drawn by:**	4:	9:
V-A Project Manager:			5:	10:
			QTY of sets required:	
TAG:		EQUIPMENT:		
COMMENTS:				DATE: