VIBRO-ACOUSTICS®
A Swegon Group company
MEMBER VISCMA

tel: 416-291-7371 1-800-565-8401
fax: 416-291-8049 1-888-811-2264
web: www.vibro-acoustics.com
eml: info@vibro-acoustics.com

Single Deflection R Rubber-in-Shear Floor Mounts

Limited Availability

R

File No.: DS-R-007 Date: 13 Feb 2015
Supersedes: DS-R-006 Date: 23 Jun 2014

R type rubber-in-shear floor mounts are discontinued.
Product availability is limited to our final inventory levels.

R-1, 2, 3

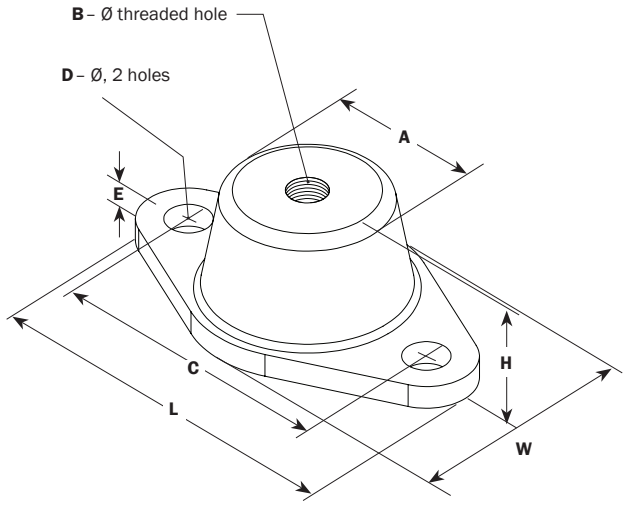

R-4

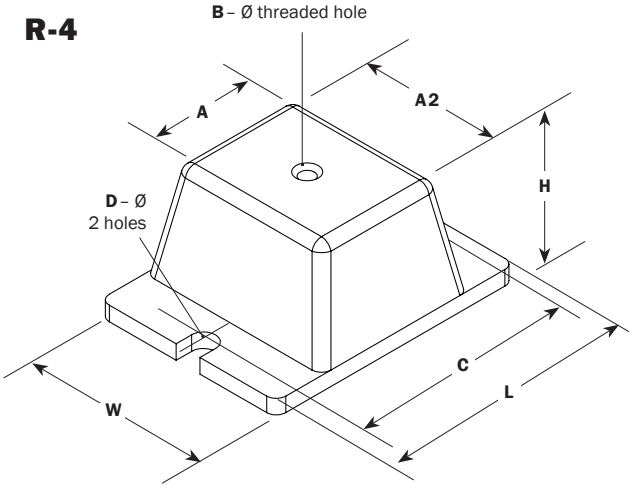

PERFORMANCE

Model	Color	Max Load lb	Max Load kN	Deflection at max load in	Deflection at max load mm	Isolator Weight † lb	Isolator Weight † kg
R-1	Black	**45**	0.20	**0.20**	5	**0.13**	0.06
	Red	**70**	0.31				
	Green	**120**	0.53				
R-2	Blue	**135**	0.60	**0.25**	6	**0.29**	0.13
	Red	**240**	1.07				
	Gray	**550**	2.45				
R-3	Green	**750**	3.34	**0.25**	6	**0.77**	0.35
	Gray	**1100**	4.89				
R-4	Green	**3000**	13.34	**0.25**	6	**2.50**	1.13
	Gray	**4000**	17.79				

† weights are approximate

DIMENSIONS: R-1, 2, 3 (in mm)

Type	L	W	H*	A	B	C	D	E
R-1	**3 1/8**	**1 3/4**	**1**	**1 1/4**	**5/16**	**2 3/8**	**0.34**	**0.19**
	79	44	25	32	8	60	9	5
R-2	**3 7/8**	**2 3/8**	**1 1/4**	**1 3/4**	**3/8**	**3**	**0.34**	**0.22**
	99	60	32	44	10	76	9	6
R-3	**5 1/2**	**3 3/8**	**1 3/4**	**2 1/2**	**1/2**	**4 1/8**	**9/16**	**1/4**
	140	86	44	64	13	105	14	6

* free (unloaded) height

DIMENSIONS: R-4 (in mm)

Type	L	W	H*	A	A2	B	C	D	E
R-4	**6 1/4**	**4 5/8**	**1 5/8**	**3**	**3 3/4**	**1/2**	**5**	**9/16**	**3/8**
	159	118	41	76	95	13	127	14	10

* free (unloaded) height

NOTES

"Single-deflection" neoprene type, with neoprene-coated metal surfaces, and top and bottom surfaces ribbed. Isolators have bolt holes in the base.

Project:		plan view of mount locations	1:	6:
Customer:			2:	7:
Consultant:			3:	8:
Dwg No.:	Rev:	Drawn by:	4:	9:
V-A Project Manager:			5:	10:
			QTY of sets required:	
TAG:		EQUIPMENT:		
COMMENTS:				DATE: