VIBRO-ACOUSTICS®
A Swegon Group company

MEMBER VISCMA

tel: 416-291-7371 1-800-565-8401
fax: 416-291-8049 1-888-811-2264
web: www.vibro-acoustics.com
eml: info@vibro-acoustics.com

2″ (50 mm) Deflection SCSR Seismic Restrained Spring Isolators (for Concrete)

SCSR-2A

For Concrete Structure

File No.: DS-SCSR2-C-017 Date: 8 Feb 2016
Supersedes: DS-SCSR2-C-016 Date: 14 Jan 2016

SCSR-2A (50–4500)

shown with cut-away

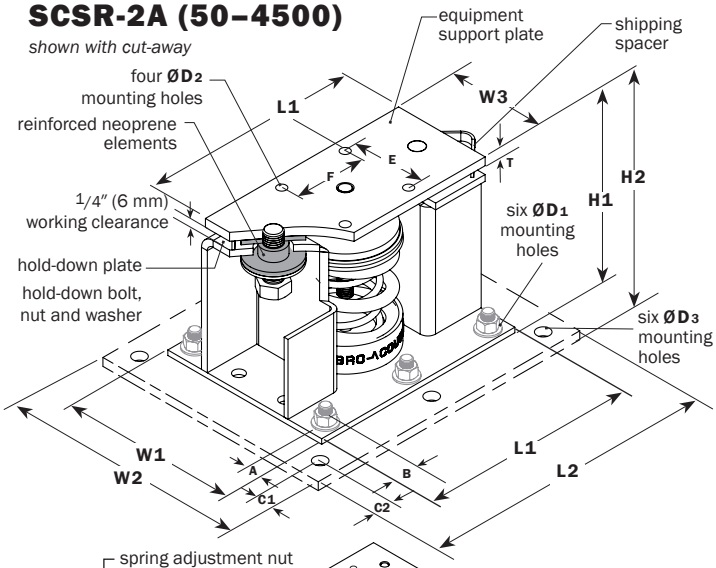

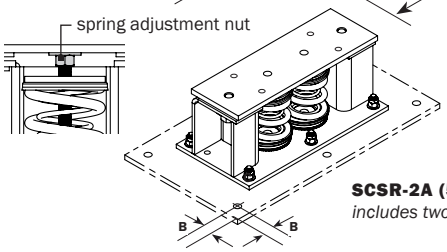

SCSR-2A (5200–9000)
includes two spring assemblies

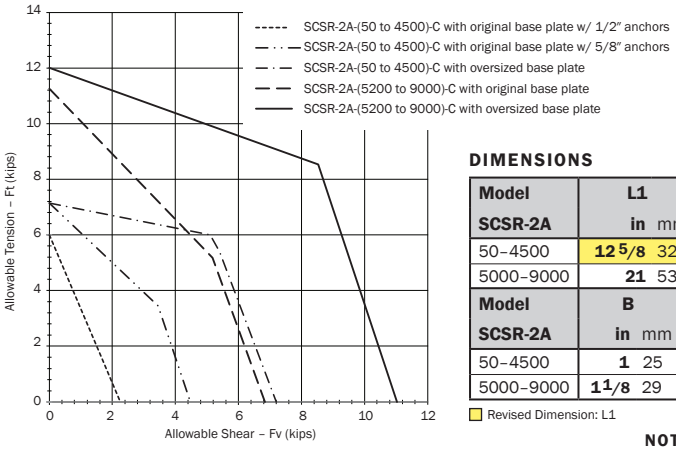

PERFORMANCE

Model	Spring Color	Rated Load		Deflection at rated load		Isolator Weight †	
	outer-inner	lb	kN	in	mm	lb	kg
SCSR-2A-50	Grey	**50**	0.22	**2.0**	51	**43.4**	19.7
SCSR-2A-100	Blue	**100**	0.44	**2.0**	51	**43.4**	19.7
SCSR-2A-150	Grey-White	**150**	0.67	**2.0**	51	**44.1**	20.0
SCSR-2A-200	Blue-White	**200**	0.89	**2.0**	51	**44.1**	20.0
SCSR-2A-300	Blue-Orange	**300**	1.33	**2.0**	51	**44.7**	20.3
SCSR-2A-400	Red	**400**	1.78	**2.0**	51	**44.6**	20.2
SCSR-2A-500	Red-White	**500**	2.22	**2.0**	51	**45.3**	20.5
SCSR-2A-600	Red-Orange	**600**	2.67	**2.0**	51	**45.9**	20.8
SCSR-2A-700	Red-Green	**700**	3.11	**2.0**	51	**45.9**	20.8
SCSR-2A-800	Green	**800**	3.56	**2.0**	51	**45.1**	20.5
SCSR-2A-900	Green-White	**900**	4.00	**2.0**	51	**45.8**	20.8
SCSR-2A-1000	Green-Orange	**1000**	4.45	**2.0**	51	**46.4**	21.0
SCSR-2A-1100	Green-Green	**1100**	4.89	**2.0**	51	**46.4**	21.0
SCSR-2A-1200	Green-Grey	**1200**	5.34	**2.0**	51	**46.6**	21.1
SCSR-2A-1400	Green-Blue	**1400**	6.23	**2.0**	51	**47.2**	21.4
SCSR-2A-1600	Green-Black	**1600**	7.12	**2.0**	51	**46.9**	21.3
SCSR-2A-1800	Green-Ivory	**1800**	8.01	**2.0**	51	**47.3**	21.5
SCSR-2A-2000	Black	**2000**	8.90	**2.0**	51	**45.1**	20.5
SCSR-2A-2200	Black-Orange	**2200**	9.97	**2.0**	51	**46.4**	21.0
SCSR-2A-2400	Black-Grey	**2400**	10.68	**2.0**	51	**46.6**	21.1
SCSR-2A-2600	Black-Blue	**2600**	11.57	**2.0**	51	**47.2**	21.4
SCSR-2A-2800	Black-Black	**2800**	12.46	**2.0**	51	**46.9**	21.3
SCSR-2A-3200	Black-Red	**3200**	14.23	**2.0**	51	**47.6**	21.6
SCSR-2A-3700	Blue-Grey	**3700**	16.45	**2.0**	51	**47.8**	21.7
SCSR-2A-4100	Blue-Black	**4100**	18.24	**2.0**	51	**48.4**	22.0
SCSR-2A-4500	Blue-Red	**4500**	20.02	**2.0**	51	**49.0**	22.2
SCSR-2A-5200	(2)Black-Blue	**5200**	23.13	**2.0**	51	**94.0**	42.6
SCSR-2A-6400	(2)Black-Red	**6400**	28.46	**2.0**	51	**96.0**	43.5
SCSR-2A-7400	(2)Blue-Grey	**7400**	32.92	**2.0**	51	**98.0**	44.5
SCSR-2A-8200	(2)Blue-Black	**8200**	36.48	**2.0**	51	**100.0**	45.4
SCSR-2A-9000	(2)Blue-Red	**9000**	40.03	**2.0**	51	**104.0**	47.2

For higher capacities, contact Vibro-Acoustics' factory
† weights approximated (oversized base plate for 50–4500 is 32 lb., 4500–9000 is 73 lb)

DIMENSIONS

Model	L1		L2		A		W1		W2		W3		H1		H2		T	
SCSR-2A	in	mm	in	mm	in	mm	in	mm	in	mm	in	mm	in	mm	in	mm	in	mm
50–4500	**12 5/8**	321	**17**	432	**3/4**	19	**10**	254	**14**	356	**5 5/8**	143	**9**	229	**9 1/2**	241	**1/2**	13
5000–9000	**21**	533	**30 1/2**	775	**1 1/8**	29	**11**	279	**17**	432	**7**	178	**9**	229	**9 1/2**	241	**1/2**	13

Model	B		C1		C2		E		F		ØD1		ØD2		ØD3	
SCSR-2A	in	mm	in	mm	in	mm	in	mm	in	mm	in	mm	in	mm	in	mm
50–4500	**1**	25	**1 1/8**	29	**1 1/4**	32	**4 1/8**	105	**4 1/8**	105	**11/16**	17	**9/16**	14	**13/16**	21
5000–9000	**1 1/8**	29	**1 3/4**	44	**1 3/4**	44	**4 1/2**	114	**10 1/2**	267	**11/16**	17	**11/16**	17	**7/8**	22

Revised Dimension: L1

For attachment to concrete structure:

1. SCSR-2A-(50 to 4500)-C loads are based on using (6) 1/2″ hilti kb tz @ 2″ emb. 12″ edge distance, 4″ thick 3000 psi cracked concrete
2. SCSR-2A-(50 to 4500)-C loads are based on using (6) 5/8″ hilti kb tz @ 4″ emb. 12″ edge distance, 6″ thick 3000 psi cracked concrete
3. SCSR-2A-(50 to 4500)-C loads with oversized base plate are based on using (6) 3/4″ hilti kb tz @ 4-3/4″ emb. 10″ edge distance, 8″ thick 3000 psi cracked concrete
4. SCSR-2A-(5200 to 9000)-C loads are based on using (6) 5/8″ hilti kb tz @ 4″ emb. 12″ edge distance, 8″ thick 4000 psi cracked concrete
5. SCSR-2A-(5200 to 9000)-C loads with oversized base plate are based on using (6) 3/4″ hilti kb tz @ 4-3/4″ emb. 14″ edge distance, 8″ thick 4000 psi cracked concrete
6. SCSR ratings for concrete are determined in accordance with ACI 318-11

NOTES

- Laterally and vertically restrained spring type isolators with housings and heavy top plates for equipment support
- Welded steel construction housings with vertically restraining limit stops
- Top plate and restraining bolts are designed to be out of contact with housing during normal operation
- Reinforced neoprene elements (snubbers) are incorporated to minimize short-circuiting of restraining bolts
- Minimum 50% additional travel to solid
- Minimum k_x/k_y ratio of 0.8
- Housing is powder-coated; hot-dipped galvanizing is optional
- All components are painted, plated, or coated for outdoor applications
- If less than 80% of the top plate is covered by the supported equipment, use an additional plate (same thickness as the isolator's equipment support plate) on top of the isolator. See installation instructions.
- All springs are powder-coated
- Springs supported with neoprene cups for noise isolation

OPTIONS ☐ HOT-DIP GALVANIZED ☐ OVERSIZED BASE PLATE

Project:		
Customer:		
Consultant:		
Dwg No.:	**Rev:**	**Drawn by:**
V-A Project Manager:		

plan view of mount locations

1:	6:
2:	7:
3:	8:
4:	9:
5:	10:
QTY of sets required:	

TAG: EQUIPMENT:

COMMENTS: DATE: