VIBRO-ACOUSTICS®
A Swegon Group company

MEMBER VISCMA

tel: 416-291-7371 1-800-565-8401
fax: 416-291-8049 1-888-811-2264
web: www.vibro-acoustics.com
eml: info@vibro-acoustics.com

SRB Seismic Restraint Bracket

SRB

File No.: DS-SRB-007 Date: 6 July 2016
Supersedes: DS-SRB-006 Date: 4 May 2016

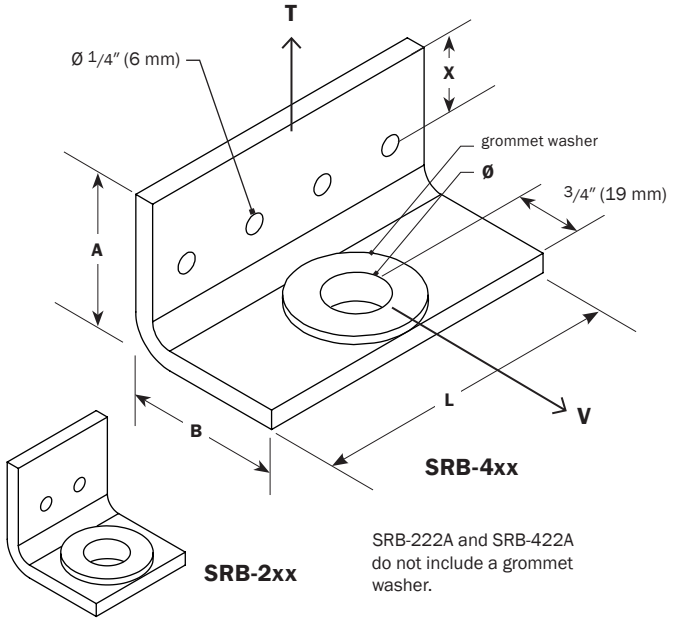

SRB-222A and SRB-422A do not include a grommet washer.

DIMENSIONS AND WEIGHT

Model	L		A		B		Ø*		X		Weight	
	in	mm	**in**	mm	**in**	mm	**in**	mm	**in**	mm	**lbs**	kg
SRB-222A	**2**	51	**2**	51	**2**	51	**1/2**	13	**1**	25	**0.3**	0.14
SRB-222B	**2**	51	**2**	51	**2**	51	**3/8**	10	**1**	25	**0.5**	0.23
SRB-222C	**2**	51	**2**	51	**2**	51	**1/2**	13	**1**	25	**0.5**	0.23
SRB-422A	**4**	102	**2**	51	**2**	51	**1/2**	13	**1**	25	**0.6**	0.27
SRB-422B	**4**	102	**2**	51	**2**	51	**3/8**	10	**1**	25	**1.0**	0.45
SRB-422C	**4**	102	**2**	51	**2**	51	**1/2**	13	**1**	25	**1.0**	0.45
SRB-423B	**4**	102	**2**	51	**3**	76	**3/8**	10	**1**	25	**1.2**	0.5
SRB-423C	**4**	102	**2**	51	**3**	76	**1/2**	13	**1**	25	**1.2**	0.5
SRB-434C	**4**	102	**3**	76	**4**	102	**1/2**	13	**1 1/2**	38	**1.8**	0.82

* Hole diameter for A models is through metal bracket since no grommet washer is included.

PERFORMANCE

Model	Attach with Screws *				Attach with Welding			
	Allowable T		Allowable V		Allowable T		Allowable V	
	lb	kN	**lb**	kN	**lb**	kN	**lb**	kN
SRB-222A	**282**	1.25	**265**	1.18	**282**	1.25	**529**	2.35
SRB-222B	**970**	4.31	**500**	2.22	**990**	4.40	**2488**	11.07
SRB-222C	**970**	4.31	**500**	2.22	**990**	4.40	**2488**	11.07
SRB-422A	**564**	1.81	**529**	2.35	**564**	1.81	**1411**	6.28
SRB-422B	**1940**	8.63	**1000**	4.45	**1980**	8.81	**2871**	12.77
SRB-422C	**1940**	8.63	**1000**	4.45	**1980**	8.81	**2871**	12.77
SRB-423B	**1940**	8.63	**1000**	4.45	**2912**	12.95	**2871**	12.77
SRB-423C	**1940**	8.63	**1000**	4.45	**2912**	12.95	**2871**	12.77
SRB-434C	**1940**	8.63	**1000**	4.45	**2045**	9.10	**1856**	8.26

* Allowable loads are maximums based on 1/4" (6 mm) HILTI self-drilling screws installed on minimum 16 ga base material for SRB-222A and SRB-422A and 10 ga for all other models.

Rigid **w/ Neo+ Pad**

SRB-222
SRB-422

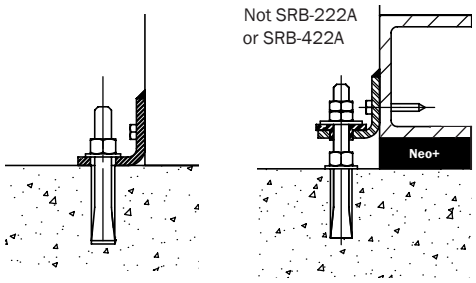

SRB-423
SRB-434

SRB-423 for toe-out channel base frames using C6 or smaller channel.

SRB-434 for larger sizes.

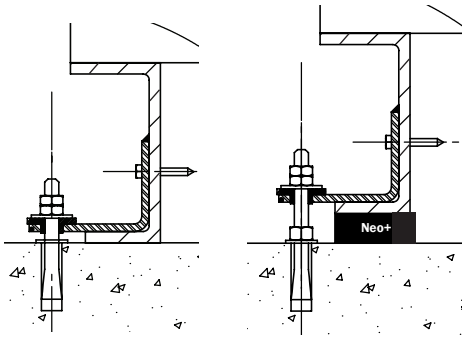

NOTES

- Allowable loads do not account for anchor bolt capacity. Contact Vibro-Acoustics for selection.
- Brackets must be installed in accordance with installation instructions to provide above performance.
- If mounted on a housekeeping pad, the pad must be seismically doweled to the structural slab and there must be sufficient edge distance and concrete thickness to properly install seismically-rated concrete anchors.
- SRB-222A and 422A brackets are galvanized; all other bracket sizes are powder-coated enamel for corrosion protection.
- Anchor bolts, self-drilling screws, and Neo + vibration isolation pads available separately from Vibro-Acoustics.
- Minimum diameter of round equipment support is 12" (305 mm) for using SRB-2xx brackets.

Project:		
Customer:		
Consultant:		
Dwg No.:	**Rev:**	**Drawn by:**
V-A Project Manager:		
TAG:		
DATE:		
COMMENTS:		

plan view of bracket locations

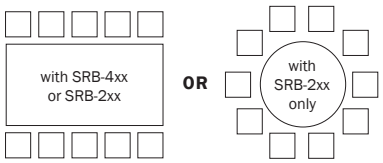

Unless otherwise specified, install brackets equally spaced along the long sides of the equipment.

1:	6:
2:	7:
3:	8:
4:	9:
5:	10:
QTY of sets required:	
Attachment Method:	

EQUIPMENT: