VIBRO-ACOUSTICS®
A Swegon Group company

MEMBER VISCMA

tel: 416-291-7371 1-800-565-8401
fax: 416-291-8049 1-888-811-2264
web: www.vibro-acoustics.com
eml: info@vibro-acoustics.com

3″ (76 mm) Deflection PSHR Precompressed Spring Hangers with Neoprene

PSHR-3N

File No.: DS-PSHR3-002 Date: 29 Sept 2016
Supersedes: DS-PSHR3-001 Date: 24 Feb 2016

PSHR-3N

shown with cut-away

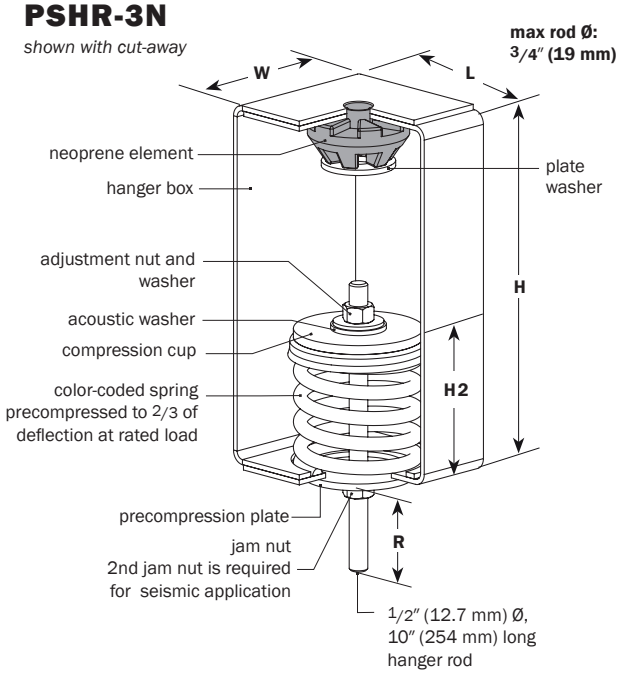

PERFORMANCE

Model	Spring Color outer-inner	Element Color	Rated Load lb	Rated Load kN	Deflection at rated load in	Deflection at rated load mm	Isolator Weight † lb	Isolator Weight † kg
PSHR-3N-100	White	Green	**100**	0.44	**3.0**	76	**12.8**	5.8
PSHR-3N-200	Yellow	Green	**200**	0.89	**3.0**	76	**13.0**	5.9
PSHR-3N-400	Red	Red	**400**	1.78	**3.0**	76	**13.3**	6.0
PSHR-3N-700	Blue	Blue	**700**	3.11	**3.0**	76	**13.8**	6.3

† weights are approximate

DIMENSIONS: PSHR-3N

Model PSHR-3N	L in	L mm	W in	W mm	H in	H mm	H2* in	H2* mm	R in	R mm
100–700	**5 1/2**	139.7	**5**	127	**12 1/2**	317.5	**5 7/8**	149	**3 1/2**	89

* precompressed height

NOTES

- Spring hanger with steel spring and welded steel housing.
- Springs are precompressed to 2/3 of deflection at rated load
- Hanger is designed to allow support rod misalignment through a 30-degree arc without contacting the hanger box
- Precompression plate serves as vertical uplift stopwasher for seismically restrained equipment, duct or piping. A second jam nut must be added to lock it in place.
- Coupling (by others) is required for attaching to support rod
- Minimum 50% additional travel to solid
- All elements safe at solid loading
- All hardware zinc-plated, Grade 2 minimum
- Springs and hanger boxes are powder-coated

Project:		plan view of hanger locations	1:	6:
Customer:			2:	7:
Consultant:			3:	8:
Dwg No.:	**Rev:**	**Drawn by:**	4:	9:
V-A Project Manager:			5:	10:
			QTY of sets required:	
TAG:		EQUIPMENT:		
COMMENTS:				DATE: