VIBRO-ACOUSTICS®
A Swegon Group company
MEMBER VISCMA

tel: 416-291-7371 1-800-565-8401
fax: 416-291-8049 1-888-811-2264
web: www.vibro-acoustics.com
eml: info@vibro-acoustics.com

1″ (25 mm) Deflection FS Free Spring Floor Mounted Isolators

FS-1A

File No.: DS-FS1-013 Date: 11 Jun 2015
Supersedes: DS-FS1-012 Date: 3 Feb 2015

FS-1A (50–4500)

shown with cut-away

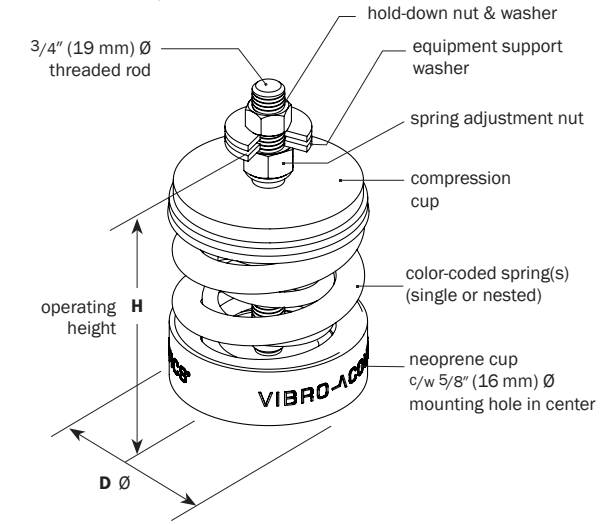

FS-1A (5000–9000)

shown with cut-away

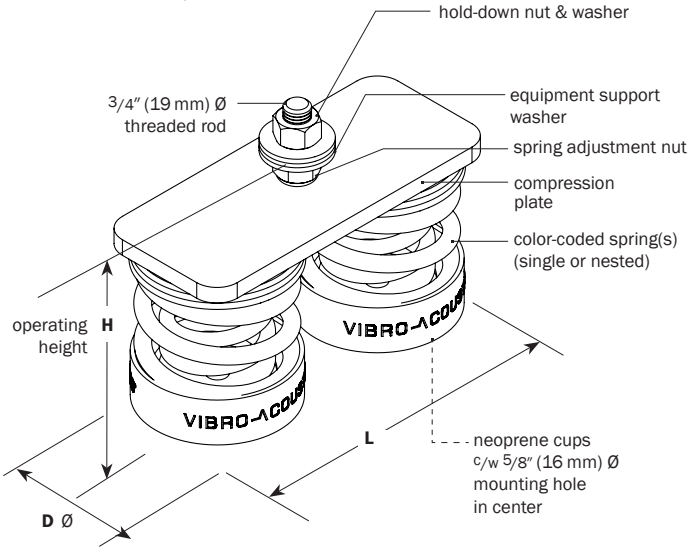

PERFORMANCE

Model	Spring Color	Rated Load		Deflection at rated load		Isolator Weight †	
	outer-inner	lb	kN	in	mm	lb	kg
FS-1A-50	Black	**50**	0.22	**1.0**	25	**4.5**	2.0
FS-1A-150	Black-White	**150**	0.67	**1.0**	25	**5.1**	2.3
FS-1A-200	Grey	**200**	0.89	**1.0**	25	**5.0**	2.3
FS-1A-300	Grey-White	**300**	1.33	**1.0**	25	**5.7**	2.6
FS-1A-400	Grey-Grey	**400**	1.78	**1.0**	25	**5.9**	2.7
FS-1A-500	Orange	**500**	2.22	**1.0**	25	**6.0**	2.7
FS-1A-600	Orange-White	**600**	2.67	**1.0**	25	**6.7**	3.0
FS-1A-700	Orange-Grey	**700**	3.11	**1.0**	25	**6.9**	3.1
FS-1A-800	Orange-Black	**800**	3.56	**1.0**	25	**7.1**	3.2
FS-1A-900	Orange-Green	**900**	4.00	**1.0**	25	**7.2**	3.3
FS-1A-1000	White	**1000**	4.45	**1.0**	25	**6.3**	2.9
FS-1A-1100	White-White	**1100**	4.89	**1.0**	25	**7.0**	3.2
FS-1A-1200	White-Grey	**1200**	5.34	**1.0**	25	**7.3**	3.3
FS-1A-1300	White-Black	**1300**	5.78	**1.0**	25	**7.5**	3.4
FS-1A-1400	White-Green	**1400**	6.23	**1.0**	25	**7.6**	3.4
FS-1A-1500	Red	**1500**	6.67	**1.0**	25	**6.1**	2.8
FS-1A-1600	Red-White	**1600**	7.12	**1.0**	25	**6.8**	3.1
FS-1A-1800	Red-Black	**1800**	8.01	**1.0**	25	**7.3**	3.3
FS-1A-2000	Red-Yellow	**2000**	8.90	**1.0**	25	**7.7**	3.5
FS-1A-2500	Red-Ivory	**2500**	11.12	**1.0**	25	**8.0**	3.6
FS-1A-3000	Red-White	**3000**	13.34	**1.0**	25	**8.1**	3.7
FS-1A-3500	Black-Red	**3500**	15.57	**1.0**	25	**8.5**	3.9
FS-1A-3800	Black-Blue	**3800**	16.90	**1.0**	25	**8.8**	4.0
FS-1A-4000	Black-Ivory	**4000**	17.80	**1.0**	25	**8.8**	4.0
FS-1A-4500	Black-White	**4500**	20.02	**1.0**	25	**8.9**	4.1
FS-1A-5000	(2)Red-Ivory	**5000**	22.24	**1.0**	25	**18.9**	8.6
FS-1A-6000	(2)Red-White	**6000**	26.69	**1.0**	25	**19.1**	8.6
FS-1A-6600	(2) Black-Black	**6600**	29.36	**1.0**	25	**19.0**	8.6
FS-1A-7000	(2) Black-Yellow	**7000**	31.14	**1.0**	25	**19.8**	9.0
FS-1A-7600	(2) Black-Blue	**7600**	33.81	**1.0**	25	**20.5**	9.3
FS-1A-8000	(2) Black-Ivory	**8000**	35.59	**1.0**	25	**20.5**	9.3
FS-1A-9000	(2) Black-White	**9000**	40.03	**1.0**	25	**20.7**	9.4

* for smaller isolator, see FS-SA † weights are approximate

DIMENSIONS: FS-1A

Model	D Ø		W		L		H	
FS-1A	in	mm	in	mm	in	mm	in	mm
50–4500	**4 1/2**	114	–	–	–	–	**6 1/2**	165
5000–9000	**4 1/2**	114	**4 1/4**	108	**10 1/4**	259	**6 1/2**	165

NOTES

- Free standing, laterally stable, unhoused spring type isolator with levelling nuts to position and secure the equipment
- Minimum 50% additional travel to solid
- Minimum k_x/k_y ratio of 0.8
- All elements safe at solid loading
- All hardware zinc-plated, Grade 2 minimum
- All springs powder coated
- Operating height shown is maximum recommended height.
- When loading isolators and during isolator spring adjustment, ensure that the spring(s) is loaded centered as installed and the spring compression cup is perpendicular to the spring in order to prevent the isolator from bending over.

Project:		plan view of mount locations	1:	6:
Customer:			2:	7:
Consultant:			3:	8:
Dwg No.:	**Rev:**	**Drawn by:**	4:	9:
V-A Project Manager:			5:	10:
			QTY of sets required:	
TAG:		EQUIPMENT:		
COMMENTS:				DATE: