VIBRO-ACOUSTICS®
A Swegon Group company

MEMBER VISCMA

tel: 416-291-7371 1-800-565-8401
fax: 416-291-8049 1-888-811-2264
web: www.vibro-acoustics.com
eml: info@vibro-acoustics.com

BulletBrace™ Preassembled Adjustable Cable Restraint Kits

BB

File No.: DS-BB-005 Date: 23 May 2017
Supersedes: DS-BB-004 Date: 20 Dec 2016

BB-13

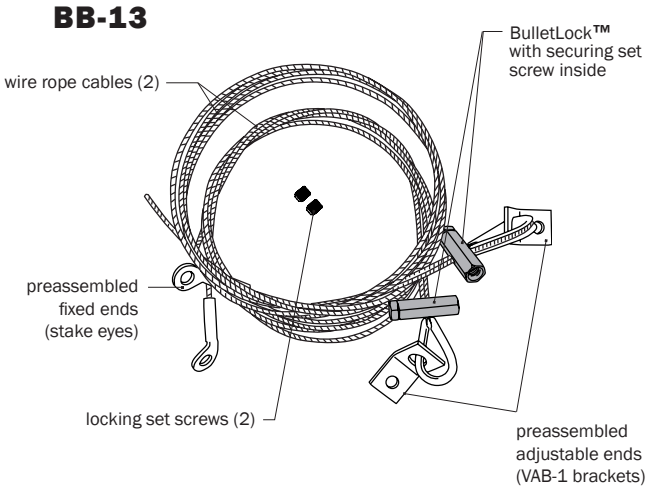

BB-19

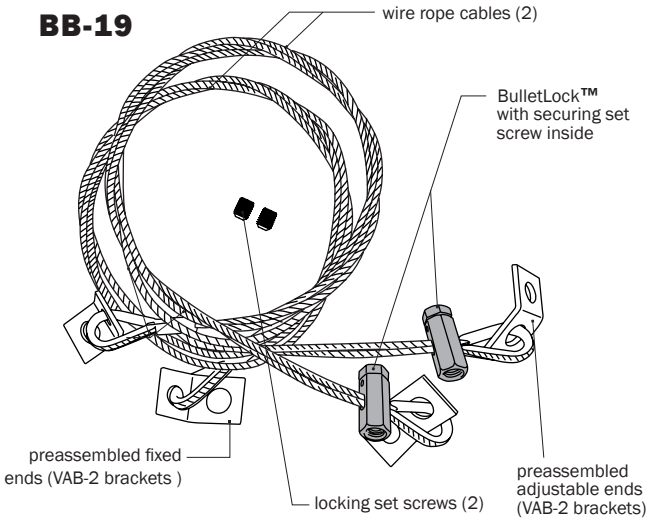

PERFORMANCE

Cable Kit Model	BulletLock™ label color	Rated Tension Load							
		Steel		6" Concrete		Metal Deck		Wood	
		lb	kN	lb	kN	lb	kN	lb	kN
BB-13	Green	**1000**	4.45	**1000**	4.45	**626**	2.78	**843**	3.75
BB-19	Red	**2000**	8.90	**1490**	6.63	**816**	3.63	**1152**	5.12

Rated loads based on:

- 30° – 60° installation angle
- 4000 psi concrete
- Hilti KB-TZ anchors
- Type W metal deck with 3.25" concrete cover
- Wood thickness at least 8 × anchor diameter
- Rated loads account for bracket prying action at critical angle
- Higher rated tension loads possible by incorporating Type DAB Double Anchor Brackets
- See BB-AL for additional requirements and load ratings for other constructions

DIMENSIONS

Cable Kit Model	Cable Length		Cable Diameter		Fixed End Hole		Adjustable End Hole		Securing and Locking Set Screw Diameter		Cable Kit Weight †	
	ft	m	in	mm	in	mm	in	mm	in	mm	lb	kg
BB-13	**10**	3	**1/8**	3	**1/2**	13	**1/2**	13	**3/8**	8.5	**1.5**	0.7
BB-19	**10**	3	**3/16**	5	**5/8**	16	**5/8**	16	**1/2**	12.7	**2.5**	1.1

† weights are approximate

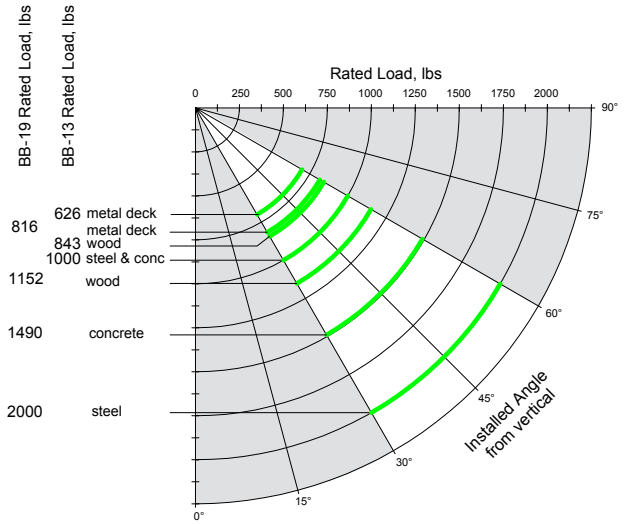

NOTES

- Restraint kits can be used as sway bracing to restrain non-structural components, e.g., equipment, ductwork, piping and conduit against seismic, wind, or blast forces. Not meant for gravity loads.
- Cable restraints consist of 7×19 galvanized steel wire rope cable in accordance with ASTM A1023 and MIL-83420
- All hardware is galvanized or zinc plated except alloy steel set screws
- Restraints have been tested and rated in accordance with ASHRAE 171.
- Restraints comply with FM1950 for use at rated load between 30 and 60 degrees.
- Kits supplied with fixed ends pulled tight to adjustable ends and securing set screws finger-tight against cables.
- Cable kits use BulletLock™ securement apparatus (US patent #9,625,003) for associated wire rope size.
- Alternate configurations, materials, and brackets available. Contact Vibro-Acoustics.
- Option: Bulk wire rope and end components available where required lengths exceed standard length.

Project:			1:	6:
Customer:			2:	7:
Consultant:			3:	8:
Dwg No.:	**Rev:**	**Drawn by:**	4:	9:
V-A Project Manager:			5:	10:
			QTY of sets required:	
TAG:		EQUIPMENT:		
COMMENTS:				DATE: