VIBRO-ACOUSTICS®
A Swegon Group company

MEMBER VISCMA

tel: 416-291-7371 1-800-565-8401
fax: 416-291-8049 1-888-811-2264
web: www.vibro-acoustics.com
eml: info@vibro-acoustics.com

1″ (25 mm) Deflection SHCB Spring Ceiling Hangers with Bottom Cup

SHCB-SN

File No.: DS-SHCBSN-003 Date: 16 Sep 2011
Supersedes: DS-SHCBSN-002 Date: 6 Jun 2011

Model shown with cut-away

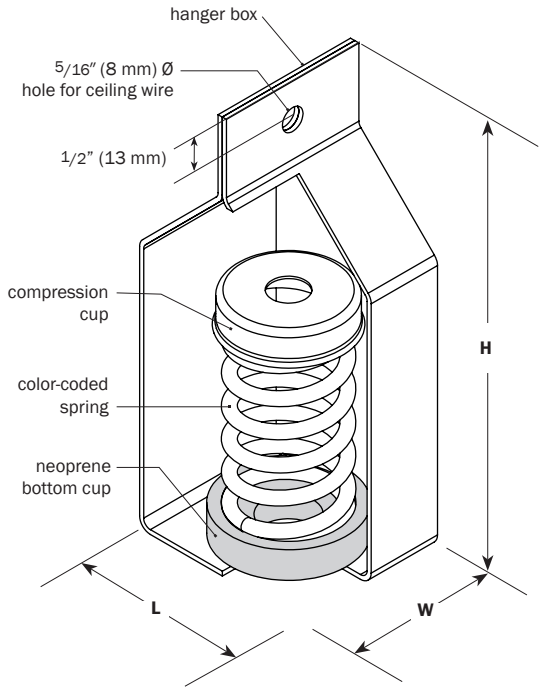

max rod Ø: 1/2″ (12 mm)

PERFORMANCE

Model	Spring Color	Rated Load		Deflection at rated load		Isolator Weight †	
		lb	kN	**in**	mm	**lb**	kg
SHCB-SN-15	White	**15**	0.07	**1.0**	25	**0.6**	0.3
SHCB-SN-30	Yellow	**30**	0.13	**1.0**	25	**0.6**	0.3
SHCB-SN-45	Orange	**45**	0.20	**1.0**	25	**0.7**	0.3
SHCB-SN-60	Red	**60**	0.27	**1.0**	25	**0.7**	0.3
SHCB-SN-100	Blue	**100**	0.44	**1.0**	25	**0.7**	0.3
SHCB-SN-150	Black	**150**	0.67	**1.0**	25	**0.7**	0.3
SHCB-SN-200	Grey	**200**	0.67	**1.0**	25	**0.8**	0.4

† weights are approximate

DIMENSIONS

Model	L		W		H	
SHCB-SN	**in**	mm	**in**	mm	**in**	mm
15–200	**2 1/2**	64	**2**	51	**6**	152

NOTES

- Spring hanger with steel spring in a welded steel housing
- Spring sits in a molded neoprene cup which includes a sleeve through the bottom hole
- Minimum 50% additional travel to solid
- Springs are powder coated, housings and compression cups are galvanized

Project:			1:	6:
Customer:			2:	7:
Consultant:			3:	8:
Dwg No.:	Rev:	Drawn by:	4:	9:
V-A Project Manager:			5:	10:
			QTY of sets required:	
TAG:		EQUIPMENT:		
COMMENTS:				DATE: