VIBRO-ACOUSTICS®
A Swegon Group company

MEMBER VISCMA

tel: 416-291-7371 1-800-565-8401
fax: 416-291-8049 1-888-811-2264
web: www.vibro-acoustics.com
eml: info@vibro-acoustics.com

2″ (50 mm) Deflection PSH Precompressed Spring Hangers

PSH-2

File No.: DS-PSH2-011 Date: 24 Feb 2016
Supersedes: DS-PSH2-010 Date: 16 Jun 2015

PSH-2N

shown with cut-away

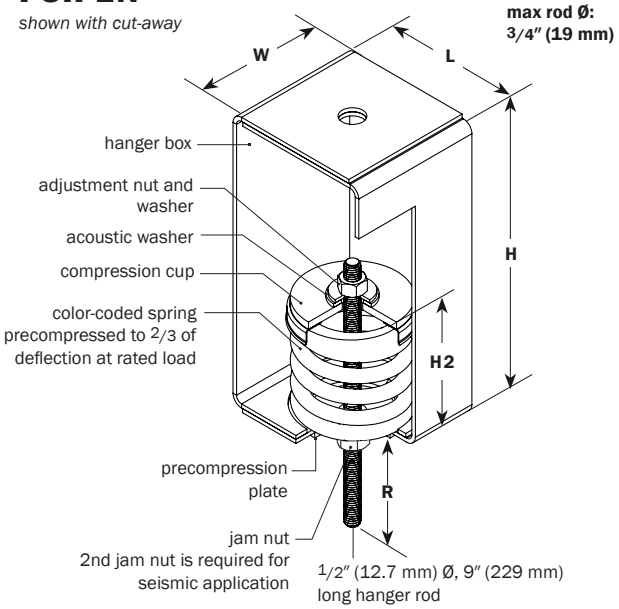

PSH-2S

shown with cut-away

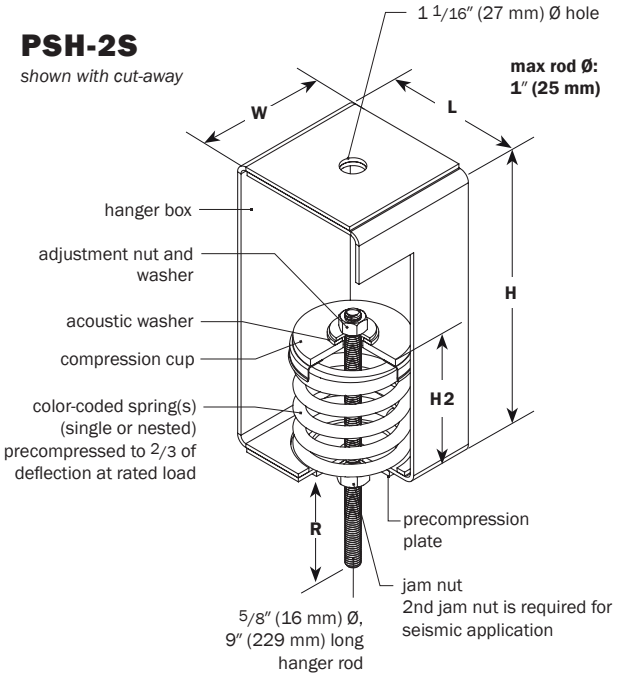

PERFORMANCE

Model	Spring Color	Rated Load		Deflection at rated load		Isolator Weight †	
	outer-inner	lb	kN	in	mm	lb	kg
PSH-2N-50	Red	**50**	0.22	**2.0**	51	**8.1**	3.7
PSH-2N-100	White	**100**	0.44	**2.0**	51	**8.2**	3.7
PSH-2N-200	Orange	**200**	0.89	**2.0**	51	**8.8**	4.0
PSH-2N-300	Green	**300**	1.33	**2.1**	53	**8.8**	4.0
PSH-2N-400	Grey	**400**	1.78	**2.0**	51	**9.1**	4.1
PSH-2N-500	Yellow	**500**	2.22	**2.1**	53	**9.2**	4.2
PSH-2N-600	Blue	**600**	2.67	**2.0**	51	**9.7**	4.4
PSH-2N-800	Black	**800**	3.56	**2.1**	53	**9.3**	4.2
PSH-2N-1000	Ivory	**1000**	4.45	**2.0**	51	**9.7**	4.4
PSH-2S-800	Green	**800**	3.56	**2.0**	51	**17.7**	8.0
PSH-2S-900	Green/White	**900**	4.00	**2.0**	51	**18.4**	8.4
PSH-2S-1000	Green/Orange	**1000**	4.45	**2.0**	51	**19.0**	8.6
PSH-2S-1100	Green/Green	**1100**	4.89	**2.0**	51	**19.0**	8.6
PSH-2S-1200	Green/Grey	**1200**	5.34	**2.0**	51	**19.3**	8.7
PSH-2S-1300	Green/Yellow	**1300**	5.78	**2.0**	51	**19.4**	8.8
PSH-2S-1400	Green/Blue	**1400**	6.23	**2.0**	51	**19.9**	9.0
PSH-2S-1600	Green/Black	**1600**	7.12	**2.1**	53	**19.5**	8.8
PSH-2S-1800	Green/Ivory	**1800**	8.01	**2.0**	51	**19.9**	9.0

† weights are approximate

DIMENSIONS: PSH-2N

Model	L		W		H		H2*		R	
PSH-2N	in	mm	in	mm	in	mm	in	mm	in	mm
50–1000	**5**	127	**4 1/2**	114	**10 1/4**	260	**4**	102	**4**	102

* precompressed height

DIMENSIONS: PSH-2S

Model	L		W		H		H2*		R	
PSH-2S	in	mm	in	mm	in	mm	in	mm	in	mm
800–1800	**6 1/2**	165	**5**	127	**11 1/2**	292	**5**	127	**4**	102

* precompressed height

NOTES

- Spring hanger with steel spring and welded steel housing.
- Springs are precompressed to 2/3 of deflection at rated load
- Hanger is designed to allow support rod misalignment through a 30-degree arc without contacting the hanger box
- Precompression plate serves as vertical uplift stopwasher for seismically restrained equipment, duct or piping. A second jam nut must be added to lock it in place.
- Coupling (by others) is required for attaching to support rod
- Minimum 50% additional travel to solid
- All elements safe at solid loading
- All hardware zinc-plated, Grade 2 minimum
- Springs and hanger boxes are powder coated

Project:		plan view of hanger locations	1:	6:
Customer:			2:	7:
Consultant:			3:	8:
Dwg No.:	**Rev:**	**Drawn by:**	4:	9:
V-A Project Manager:			5:	10:
			QTY of sets required:	
TAG:		EQUIPMENT:		
COMMENTS:				DATE: