VIBRO-ACOUSTICS®
A Swegon Group company

MEMBER VISCMA

tel: 416-291-7371 1-800-565-8401
fax: 416-291-8049 1-888-811-2264

web: www.vibro-acoustics.com
eml: info@vibro-acoustics.com

3″ (76 mm) Deflection SHR Spring Hangers with Neoprene

SHR-3

File No.: DS-SHR3-008 Date: 24 Feb 2016
Supersedes: DS-SHR3-007 Date: 04 Jan 2016

Model shown with cut-away

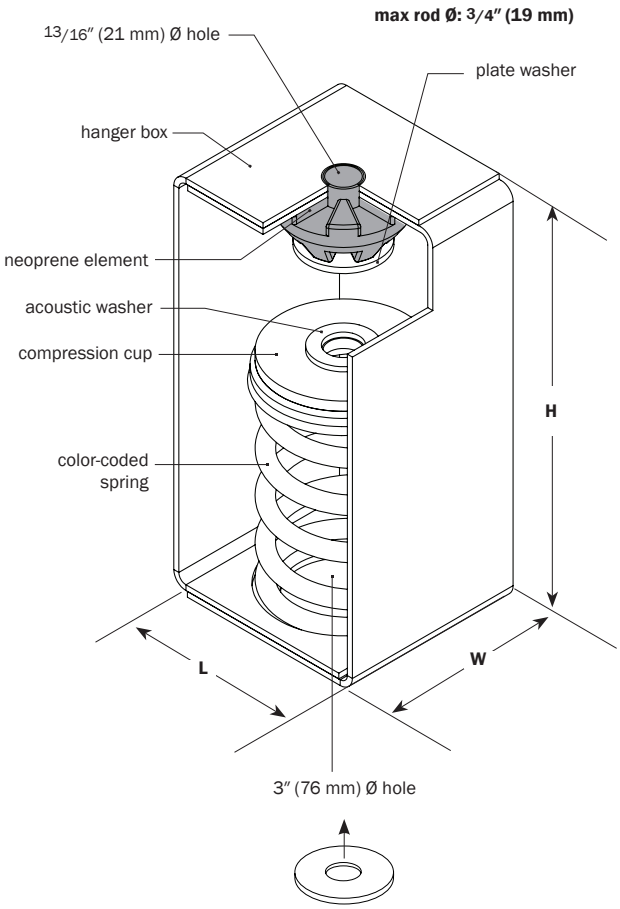

vertical uplift stopwasher
(optional – required for components with seismic restraints)

PERFORMANCE

Model	Spring Color	Element Color	Rated Load lb	Rated Load kN	Deflection at rated load in	Deflection at rated load mm	Isolator Weight † lb	Isolator Weight † kg
SHR-3N-100	White	Green	**100**	0.44	**3.0**	76	**10.8**	4.9
SHR-3N-200	Yellow	Green	**200**	0.89	**3.0**	76	**11.0**	5.0
SHR-3N-400	Red	Red	**400**	1.78	**3.0**	76	**11.3**	5.1
SHR-3N-700	Blue	Blue	**700**	3.11	**3.0**	76	**11.8**	5.3

† weights are approximate

DIMENSIONS

Model SHR-3N	L in	L mm	W in	W mm	H in	H mm
100–700	**5 1/2**	140	**5**	127	**12 1/2**	318

NOTES

- Spring hanger with steel spring and welded steel housing
- Hanger is designed to allow support rod misalignment through a 30-degree arc without contacting the hanger box
- Vertical uplift stopwasher must be added on spring hangers for seismically restrained equipment, duct or piping
- Minimum 50% additional travel to solid
- Springs, compression cups and housings are powder coated

Project:		plan view of hanger locations	1:	6:
Customer:			2:	7:
Consultant:			3:	8:
Dwg No.:	**Rev:**	**Drawn by:**	4:	9:
V-A Project Manager:			5:	10:
			QTY of sets required:	
TAG:		EQUIPMENT:		
COMMENTS:				DATE: