VIBRO-ACOUSTICS®
A Swegon Group company

MEMBER VISCMA

tel: 416-291-7371 1-800-565-8401
fax: 416-291-8049 1-888-811-2264
web: www.vibro-acoustics.com
eml: info@vibro-acoustics.com

Double Deflection RD Rubber-in-Shear Floor Mounts

RD

File No.: DS-RD-007 Date: 8 May 2017
Supersedes: DS-RD-006 Date: 23 Jun 2014

RD-1, 2, 3

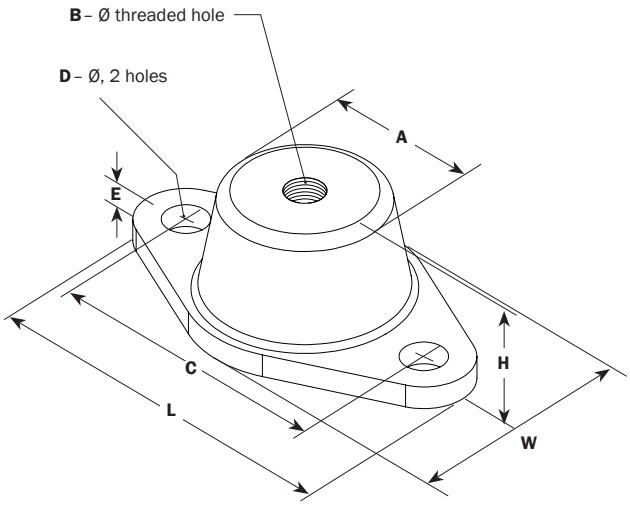

RD-4

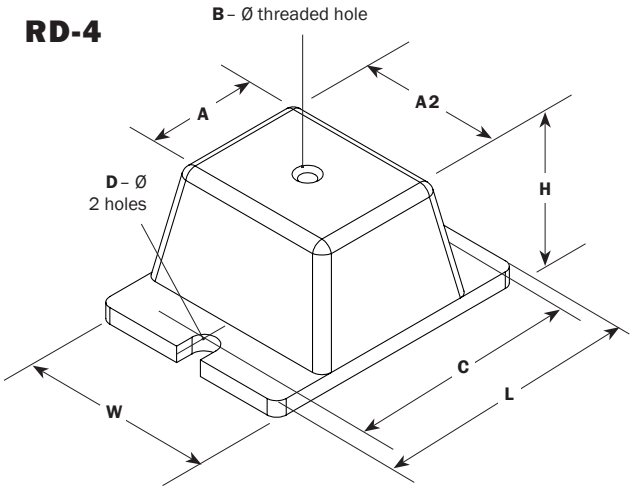

PERFORMANCE

Model	Color Code	Max Load lb	Max Load kN	Deflection at rated load in	Deflection at rated load mm	Isolator Weight † lb	Isolator Weight † kg
RD-1	Blue	**35**	0.16	**0.40**	10	**0.13**	0.06
	Black	**45**	0.20				
	Red	**70**	0.31				
	Green	**120**	0.53				
RD-2	Blue	**135**	0.60	**0.50**	13	**0.33**	0.15
	Black	**170**	0.76				
	Red	**240**	1.07				
	Green	**380**	1.69				
	Gray	**550**	2.45				
RD-3	Black	**250**	1.11	**0.50**	13	**1.02**	0.47
	Red	**525**	2.34				
	Green	**750**	3.34				
	Gray	**1100**	4.89				
RD-4	Black	**1500**	3.03	**0.50**	13	**3.20**	1.45
	Red	**2250**	10.01				
	Green	**3000**	13.34				
	Gray	**4000**	17.79				

† weights are approximate

DIMENSIONS: RD-1, 2, 3 (in mm)

Type	L	W	H*	A	B	C	D	E
RD-1	3 1/8	1 3/4	1 1/4	1 1/4	5/16	2 3/8	0.34	0.19
	79	44	32	32	8	60	9	5
RD-2	3 7/8	2 3/8	1 3/4	1 3/4	3/8	3	0.34	0.22
	99	60	44	44	10	76	9	6
RD-3	5 1/2	3 3/8	2 7/8	2 1/2	1/2	4 1/8	9/16	1/4
	140	86	73	64	13	105	14	6

* free (unloaded) height

DIMENSIONS: RD-4 (in mm)

Type	L	W	H*	A	A2	B	C	D	E
RD-4	6 1/4	4 5/8	2 3/4	3	3 3/4	1/2	5	9/16	3/8
	159	118	70	76	95	13	127	14	10

* free (unloaded) height

NOTES

- "Double-deflection" neoprene type, with neoprene-coated steel surfaces, and top and bottom surfaces ribbed. Isolators have bolt holes in the base
- Natural frequencies as low as 4.5 Hz at maximum loads

Project:			plan view of mount locations	1: 6:
Customer:				2: 7:
Consultant:				3: 8:
Dwg No.:	Rev:	Drawn by:		4: 9:
V-A Project Manager:				5: 10:
				QTY of sets required:
TAG:			EQUIPMENT:	
COMMENTS:				DATE: