VIBRO-ACOUSTICS®

Member VISCMA

Noise Control | Vibration Isolation | Restraint Systems

tel: 416-291-7371 1-800-565-8401
fax: 416-291-8049 1-888-811-2264

web: www.vibro-acoustics.com
eml: info@vibro-acoustics.com

Cooling Tower Bases

CTB

File No.:	DS-CTB-001	Date:	17 May 2013
Supersedes:	New	Date:	New

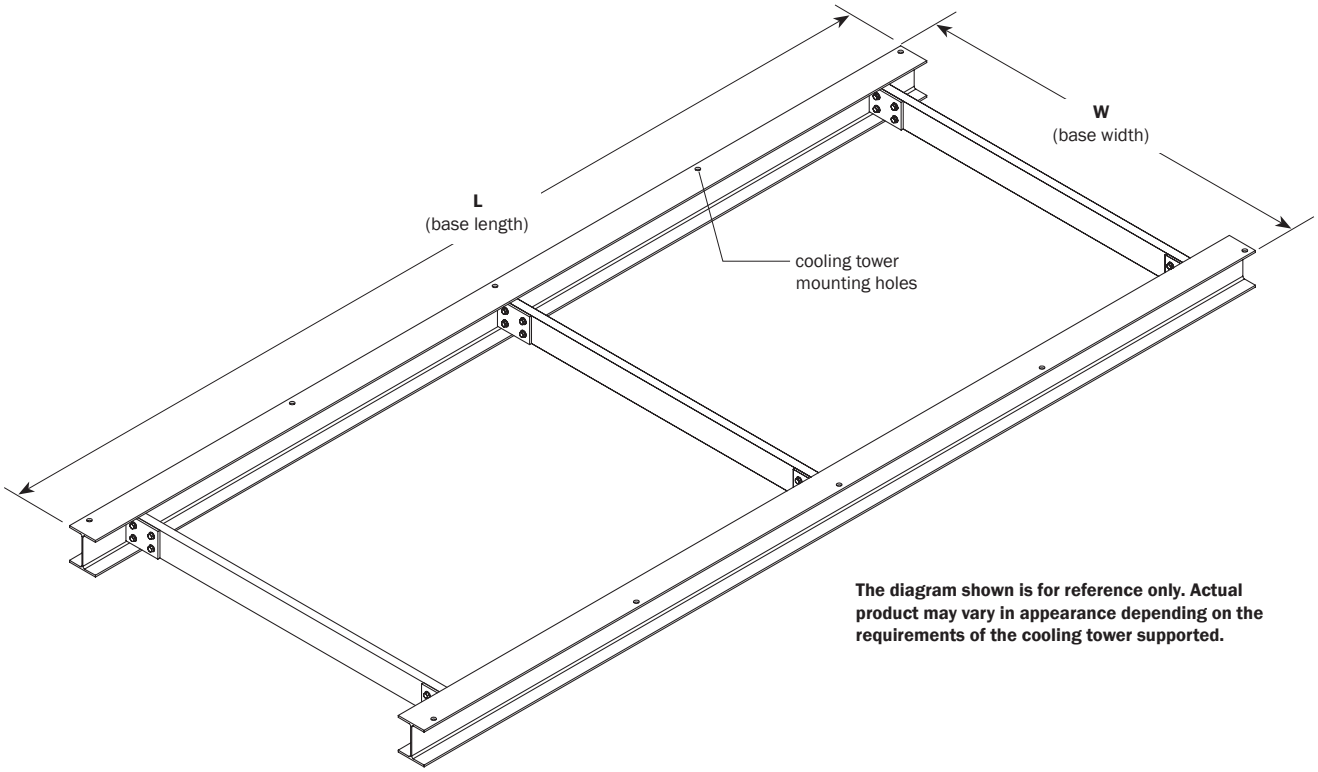

The diagram shown is for reference only. Actual product may vary in appearance depending on the requirements of the cooling tower supported.

END VIEW

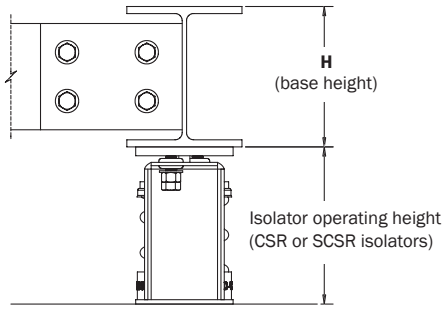

STANDARD OPTIONS (not shown in diagram)

- ☐ Special finish
  - ☐ Hot-dip galvanized
  - ☐ Epoxy paint
  - ☐ Enamel paint

Equipment			Base Dimensions and Weight				Isolation	
Manufacturer	**Model**	**Operating Weight** (lb)	**L** (in)	**W** (in)	**H** (in)	**Base Weight** (lb)	**Isolator Nominal Deflection** (in)	**Total Operating Weight** (lb)

Project:			plan view of mount locations	1: / 6:
Customer:				2: / 7:
Consultant:				3: / 8:
Dwg No.:	**Rev:**	**Drawn by:**		4: / 9:
V-A Project Manager:				5: / 10:
				QTY of sets required:
TAG:			EQUIPMENT:	
COMMENTS:				DATE:

This datasheet is not intended for final submittal purposes