VIBRO-ACOUSTICS®
A Swegon Group company

MEMBER VISCMA

tel: 416-291-7371 1-800-565-8401
fax: 416-291-8049 1-888-811-2264
web: www.vibro-acoustics.com
eml: info@vibro-acoustics.com

NH Neoprene Hangers

NH

File No.: DS-NH-012 Date: 6 Mar 2014
Supersedes: DS-NH-011 Date: 28 Feb 2014

NH-1

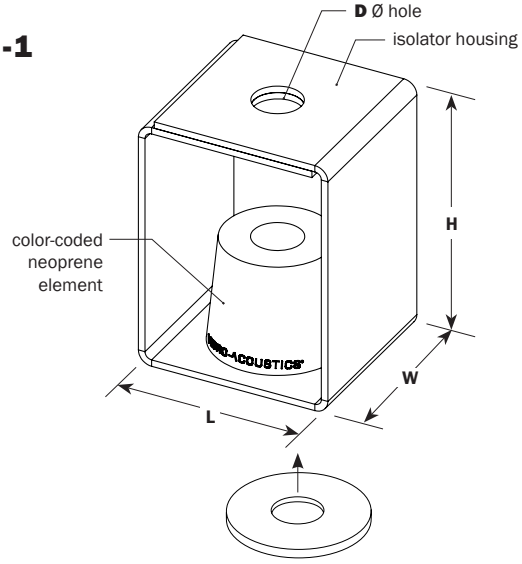

vertical uplift stopwasher
(optional – required for components
with seismic restraints)

NH-2

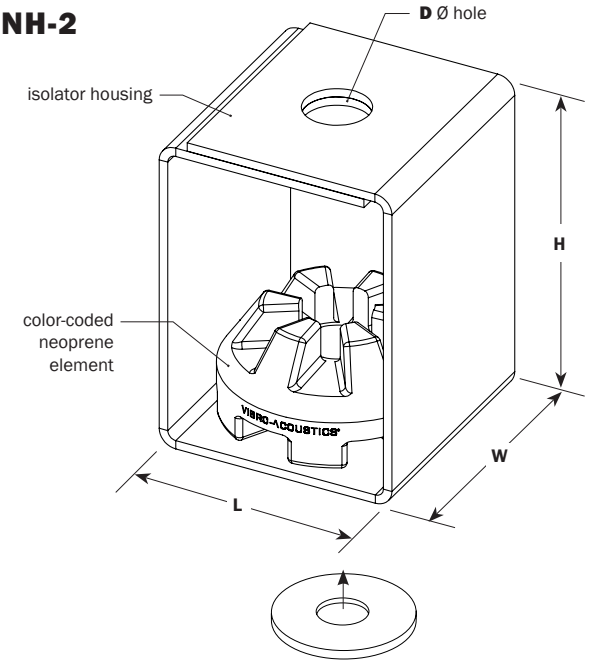

vertical uplift stopwasher
(optional – required for components
with seismic restraints)

PERFORMANCE

Model	Element Color	Max Load lb	Max Load kN	Deflection in	Deflection mm	Weight lb	Weight kg
NH-1-30	Orange	**30**	0.13	**0.35**	9	**0.5**	0.2
NH-1-60	Blue	**60**	0.27	**0.35**	9	**0.5**	0.2
NH-1-100	Green	**100**	0.44	**0.35**	9	**0.5**	0.2
NH-1-150	Red	**150**	0.67	**0.35**	9	**0.6**	0.3
NH-1-200	Black	**200**	0.89	**0.35**	9	**0.6**	0.3
NH-2-300	Green	**300**	1.33	**0.40**	10	**1.7**	0.8
NH-2-400	Red	**400**	1.78	**0.40**	10	**1.7**	0.8
NH-2-500	Black	**500**	2.22	**0.40**	10	**1.7**	0.8
NH-2-700	Blue	**700**	3.11	**0.40**	10	**1.7**	0.8
NH-2-1000	Yellow	**1000**	4.45	**0.40**	10	**1.7**	0.8

† weights are approximate

DIMENSIONS

Type	L in	L mm	W in	W mm	H in	H mm	D Ø in	D Ø mm	Max Rod Size in	Max Rod Size mm
NH-1	**2 1/4**	57	**2**	51	**3**	76	**9/16**	14	**1/2**	12
NH-2	**3**	76	**3**	76	**4 1/8**	105	**13/16**	20	**3/4**	19

NOTES

- Double-deflection neoprene hanger type, with neoprene grommet between hanger rod and housing.
- Neoprene element includes metal washer for load distribution and fail safe.
- Vertical uplift stopwasher must be added on rubber hangers for seismically restained equipment, duct or piping.
- Galvanized or painted steel-finish housing.

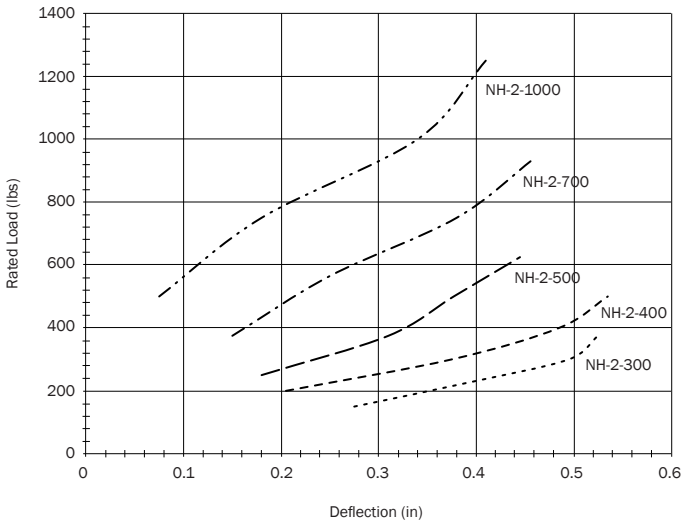

Project:			plan view of hanger locations	1: / 6:
Customer:				2: / 7:
Consultant:				3: / 8:
Dwg No.:	**Rev:**	**Drawn by:**		4: / 9:
V-A Project Manager:				5: / 10:
				QTY of sets required:
TAG:			EQUIPMENT:	
COMMENTS:				DATE: