VIBRO-ACOUSTICS®
A Swegon Group company

MEMBER VISCMA

tel: 416-291-7371 1-800-565-8401
fax: 416-291-8049 1-888-811-2264
web: www.vibro-acoustics.com
eml: info@vibro-acoustics.com

1″ (25 mm) Deflection SCSR Seismic Restrained Spring Isolators (for Steel)

SCSR-1A

For Steel Structure

File No.: DS-SCSR1-S-013 Date: 14 Jan 2016
Supersedes: DS-SCSR1-S-012 Date: 26 Oct 2015

SCSR-1A (50–4500)

shown with cut-away

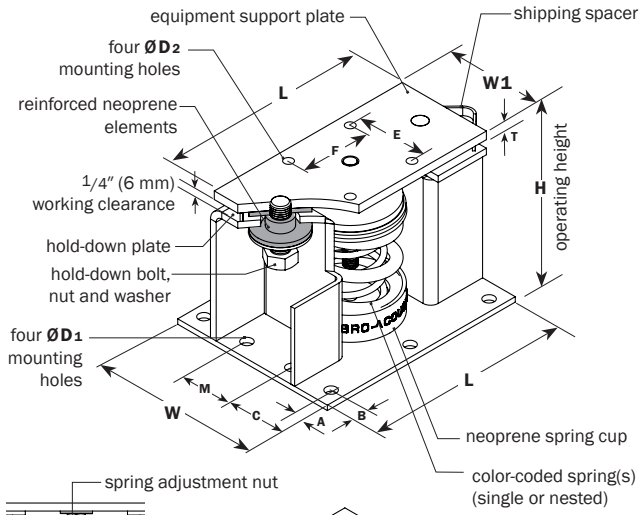

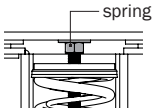

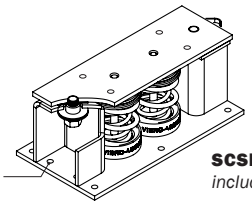

SCSR-1A (5000–9000)
includes two spring assemblies

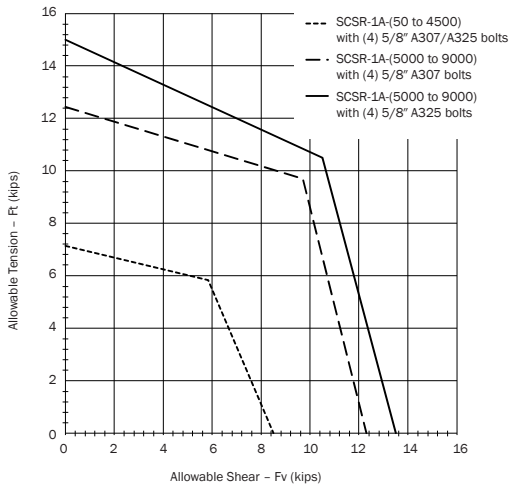

PERFORMANCE

Model	Spring Color	Rated Load		Deflection at rated load		Isolator Weight †	
	outer-inner	lb	kN	in	mm	lb	kg
SCSR-1A-50	Black	**50**	0.22	**1.0**	25	**43.4**	19.7
SCSR-1A-150	Black-White	**150**	0.67	**1.0**	25	**44.1**	20.0
SCSR-1A-200	Grey	**200**	0.89	**1.0**	25	**44.1**	20.0
SCSR-1A-300	Grey-White	**300**	1.33	**1.0**	25	**44.7**	20.3
SCSR-1A-400	Grey-Grey	**400**	1.78	**1.0**	25	**44.6**	20.2
SCSR-1A-500	Orange	**500**	2.22	**1.0**	25	**45.3**	20.5
SCSR-1A-600	Orange-White	**600**	2.67	**1.0**	25	**45.9**	20.8
SCSR-1A-700	Orange-Grey	**700**	3.11	**1.0**	25	**45.9**	20.8
SCSR-1A-800	Orange-Black	**800**	3.56	**1.0**	25	**45.1**	20.5
SCSR-1A-900	Orange-Green	**900**	4.00	**1.0**	25	**45.8**	20.8
SCSR-1A-1000	White	**1000**	4.45	**1.0**	25	**46.4**	21.0
SCSR-1A-1100	White-White	**1100**	4.89	**1.0**	25	**46.4**	21.0
SCSR-1A-1200	White-Grey	**1200**	5.34	**1.0**	25	**46.6**	21.1
SCSR-1A-1300	White-Black	**1300**	5.78	**1.0**	25	**47.2**	21.4
SCSR-1A-1400	White-Green	**1400**	6.23	**1.0**	25	**47.2**	21.4
SCSR-1A-1500	Red	**1500**	6.67	**1.0**	25	**46.9**	21.3
SCSR-1A-1600	Red-White	**1600**	7.12	**1.0**	25	**46.9**	21.3
SCSR-1A-1800	Red-Black	**1800**	8.01	**1.0**	25	**47.3**	21.5
SCSR-1A-2000	Red-Yellow	**2000**	8.90	**1.0**	25	**45.1**	20.5
SCSR-1A-2500	Red-Ivory	**2500**	11.12	**1.0**	25	**47.2**	21.4
SCSR-1A-3000	Red-White	**3000**	13.34	**1.0**	25	**47.6**	21.6
SCSR-1A-3500	Black-Red	**3500**	15.57	**1.0**	25	**47.8**	21.7
SCSR-1A-3800	Black-Blue	**3800**	16.90	**1.0**	25	**47.8**	21.7
SCSR-1A-4000	Black-Ivory	**4000**	17.80	**1.0**	25	**48.4**	22.0
SCSR-1A-4500	Black-White	**4500**	20.02	**1.0**	25	**49.0**	22.2
SCSR-1A-5000	(2) Red-Ivory	**5000**	22.24	**1.0**	25	**87.0**	39.5
SCSR-1A-6000	(2) Red-White	**6000**	26.69	**1.0**	25	**88.0**	39.9
SCSR-1A-6600	(2) Black-Black	**6600**	29.36	**1.0**	25	**88.0**	39.9
SCSR-1A-7000	(2) Black-Yellow	**7000**	31.14	**1.0**	25	**89.0**	40.3
SCSR-1A-7600	(2) Black-Blue	**7600**	33.81	**1.0**	25	**89.0**	40.3
SCSR-1A-8000	(2) Black-Ivory	**8000**	35.59	**1.0**	25	**90.0**	40.8
SCSR-1A-9000	(2) Black-White	**9000**	40.03	**1.0**	25	**92.0**	41.7

For higher capacities, contact Vibro-Acoustics' factory
† weights are approximate

DIMENSIONS

Model SCSR-1A	L in	L mm	W in	W mm	H in	H mm	A in	A mm	B in	B mm	C in	C mm	M in	M mm
50–4500	**12 5/8**	321	**10**	254	**9**	229	**3/4**	19	**1**	25	**3 1/2**	89	**3**	76
5000–9000	**21**	533	**11**	279	**9**	229	**1 1/8**	29	**1 1/8**	29	**3 5/8**	92	**3 3/4**	82

Model SCSR-1A	W1 in	W1 mm	E in	E mm	F in	F mm	ØD1 in	ØD1 mm	ØD2 in	ØD2 mm	T in	T mm
50–4500	**5 5/8**	143	**4 1/8**	105	**4 1/8**	105	**11/16**	17	**9/16**	14	**1/2**	13
5000–9000	**7**	178	**4 1/2**	114	**10 1/2**	267	**11/16**	17	**11/16**	17	**1/2**	13

Revised Dimensions: L and C

NOTES

- Laterally and vertically restrained spring type isolators with housings and heavy top plates for equipment support
- Welded steel construction housings with vertically restraining limit stops
- Top plate and restraining bolts are designed to be out of contact with housing during normal operation
- Reinforced neoprene elements (snubbers) are incorporated to minimize short-circuiting of restraining bolts
- Minimum 50% additional travel to solid
- Minimum k_x/k_y ratio of 0.8
- Housing is powder-coated; hot-dipped galvanizing is optional
- All components are painted, plated, or coated for outdoor applications
- If less than 80% of the top plate is covered by the supported equipment, use an additional plate (same thickness as the isolator's equipment support plate) on top of the isolator. See installation instructions.
- All springs are powder-coated
- Springs supported with neoprene cups for noise isolation

OPTION ☐ HOT-DIP GALVANIZED

Project:		
Customer:		
Consultant:		
Dwg No.:	**Rev:**	**Drawn by:**
V-A Project Manager:		

plan view of mount locations

1:	6:
2:	7:
3:	8:
4:	9:
5:	10:
QTY of sets required:	

TAG: EQUIPMENT:

COMMENTS: DATE: