VIBRO-ACOUSTICS®
A Swegon Group company

MEMBER VISCMA

tel: 416-291-7371 1-800-565-8401
fax: 416-291-8049 1-888-811-2264
web: www.vibro-acoustics.com
eml: info@vibro-acoustics.com

2″ (50 mm) Deflection CM Closed Mount Spring Isolators

CM-2

File No.: DS-CM2-007 Date: 17 Aug 2015
Supersedes: DS-CM2-006 Date: 13 Mar 2012

CM-2N

shown with cut-away

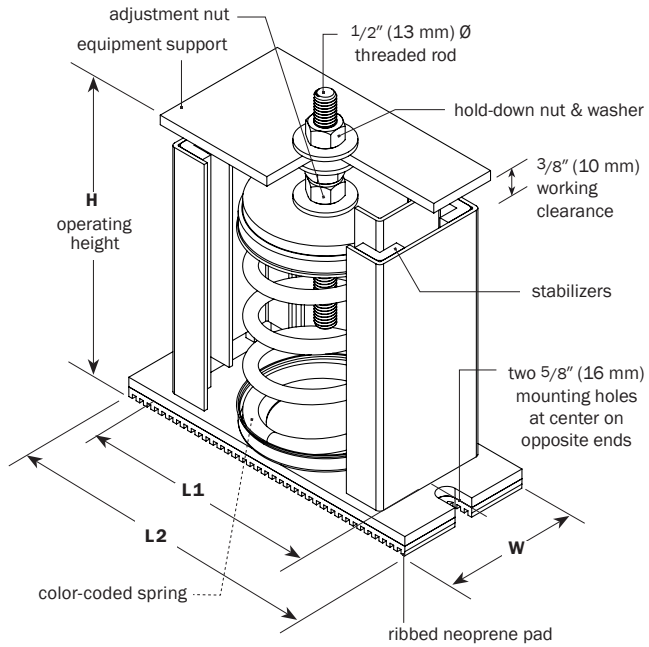

CM-2S

shown with cut-away

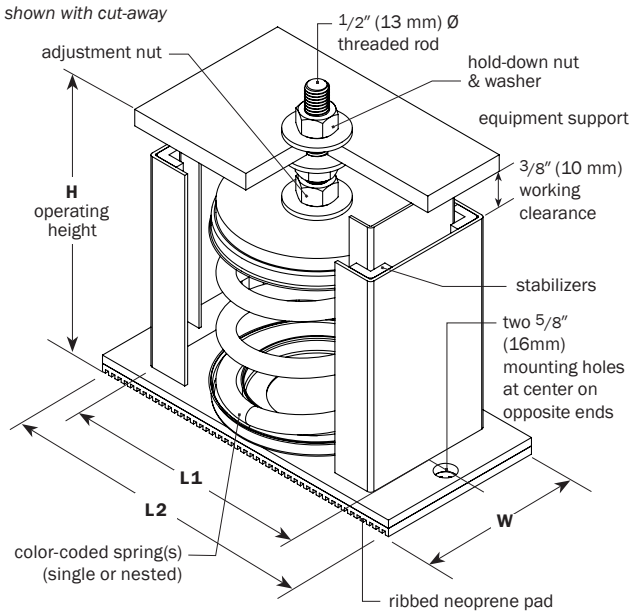

PERFORMANCE

Model	Spring Color outer-inner	Rated Load lb	kN	Deflection at rated load in	mm	Isolator Weight † lb	kg
CM-2N-50	Red	**50**	0.22	**2.0**	51	**8.6**	3.9
CM-2N-100	White	**100**	0.44	**2.0**	51	**8.7**	4.0
CM-2N-200	Orange	**200**	0.89	**2.0**	51	**9.3**	4.2
CM-2N-300	Green	**300**	1.33	**2.1**	53	**9.3**	4.2
CM-2N-400	Grey	**400**	1.78	**2.0**	51	**9.6**	4.3
CM-2N-500	Yellow	**500**	2.22	**2.1**	53	**9.7**	4.4
CM-2N-600	Blue	**600**	2.67	**2.0**	51	**10.2**	4.6
CM-2N-800	Black	**800**	3.56	**2.1**	53	**9.8**	4.4
CM-2N-1000	Ivory	**1000**	4.45	**2.0**	51	**10.2**	4.6
CM-2S-800	Green	**800**	3.56	**2.0**	51	**19.4**	8.8
CM-2S-900	Green-White	**900**	4.00	**2.0**	51	**20.1**	9.1
CM-2S-1000	Green-Orange	**1000**	4.45	**2.0**	51	**20.7**	9.4
CM-2S-1100	Green-Green	**1100**	4.89	**2.0**	51	**20.7**	9.4
CM-2S-1200	Green-Grey	**1200**	5.34	**2.0**	51	**20.9**	9.5
CM-2S-1300	Green-Yellow	**1300**	5.78	**2.0**	51	**21.0**	9.5
CM-2S-1400	Green-Blue	**1400**	6.23	**2.0**	51	**21.5**	9.8
CM-2S-1600	Green-Black	**1600**	7.12	**2.0**	51	**21.1**	9.6
CM-2S-1800	Green-Ivory	**1800**	7.12	**2.0**	51	**21.5**	9.8

† weights are approximate

DIMENSIONS: CM-2N

Model CM-2N	L1 in	mm	L2 in	mm	W in	mm	H in	mm
50–1000	**6 1/4**	158	**8 1/4**	210	**3 1/2**	89	**7 1/2**	191

DIMENSIONS: CM-2S

Model CM-2S	L1 in	mm	L2 in	mm	W in	mm	H in	mm
800–1800	**7 3/4**	197	**10**	254	**5**	127	**7 5/8**	198

NOTES

- Laterally supported, housed spring type isolator with telescoping equipment support plate, leveling bolt and hold-down nut for attaching equipment.
- Springs are supported with a cup on a metal base plate complete with a ribbed neoprene vibration isolation pad, 1/4″ (6 mm) thick, bonded to the base plate.
- Steel telescoping housing incorporates neoprene stabilzers that prevent metal-to-metal contact while resisting movement and provides vertical damping.
- Minimum 50% additional travel to solid
- Minimum k_x/k_y ratio of 0.8

Project:		plan view of mount locations	1:	6:
Customer:			2:	7:
Consultant:			3:	8:
Dwg No.:	**Rev:**	**Drawn by:**	4:	9:
V-A Project Manager:			5:	10:
			QTY of sets required:	
TAG:		EQUIPMENT:		
COMMENTS:				DATE: