VIBRO-ACOUSTICS®
A Swegon Group company

MEMBER VISCMA

tel: 416-291-7371 1-800-565-8401
fax: 416-291-8049 1-888-811-2264
web: www.vibro-acoustics.com
eml: info@vibro-acoustics.com

2″ (50 mm) Deflection PSHR Precompressed Spring Hangers with Neoprene

PSHR-2

File No.: DS-PSHR2-014 Date: 6 May 2016
Supersedes: DS-PSHR2-013 Date: 24 Feb 2016

PSHR-2N

shown with cut-away

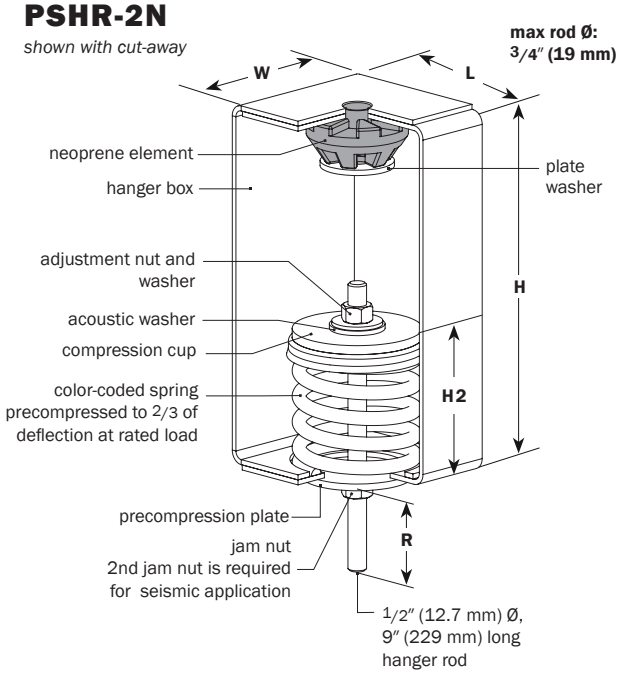

PSHR-2S

shown with cut-away

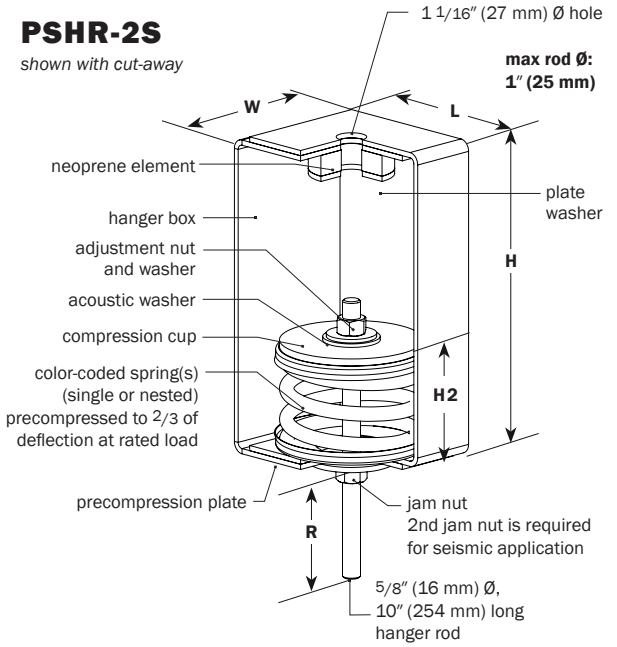

PERFORMANCE

Model	Spring Color outer-inner	Element Color	Rated Load lb	Rated Load kN	Deflection at rated load in	Deflection at rated load mm	Isolator Weight † lb	Isolator Weight † kg
PSHR-2N-50	Red	Green	**50**	0.22	**2.0**	51	**8.3**	3.8
PSHR-2N-100	White	Green	**100**	0.44	**2.0**	51	**8.4**	3.8
PSHR-2N-200	Orange	Green	**200**	0.89	**2.0**	51	**9.0**	4.1
PSHR-2N-300	Green	Green	**300**	1.33	**2.1**	53	**9.0**	4.1
PSHR-2N-400	Grey	Red	**400**	1.78	**2.0**	51	**9.3**	4.2
PSHR-2N-500	Yellow	Black	**500**	2.22	**2.1**	53	**9.4**	4.3
PSHR-2N-600	Blue	Blue	**600**	2.67	**2.0**	51	**9.9**	4.5
PSHR-2N-800	Black	Blue	**800**	3.56	**2.1**	53	**9.5**	4.3
PSHR-2N-1000	Ivory	Yellow	**1000**	4.45	**2.0**	51	**9.9**	4.5
PSHR-2S-800	Green	Green	**800**	3.56	**2.0**	51	**18.0**	8.1
PSHR-2S-900	Green/White	Green	**900**	4.00	**2.0**	51	**18.6**	8.5
PSHR-2S-1000	Green/Orange	Green	**1000**	4.45	**2.0**	51	**19.3**	8.7
PSHR-2S-1100	Green/Green	Green	**1100**	4.89	**2.0**	51	**19.2**	8.7
PSHR-2S-1200	Green/Grey	Green	**1200**	5.34	**2.0**	51	**19.5**	8.9
PSHR-2S-1300	Green/Yellow	Green	**1300**	5.78	**2.0**	51	**19.6**	8.9
PSHR-2S-1400	Green/Blue	Green	**1400**	6.23	**2.0**	51	**20.1**	9.1
PSHR-2S-1600	Green/Black	Green	**1600**	7.12	**2.1**	53	**19.7**	9.0
PSHR-2S-1800	Green/Ivory	Green	**1800**	8.01	**2.0**	51	**20.1**	9.1

† weights are approximate

DIMENSIONS: PSHR-2N

Model PSHR-2N	L in	L mm	W in	W mm	H in	H mm	H2* in	H2* mm	R in	R mm
50–1000	**5**	127	**4 1/2**	114	**10 1/4**	260	**4 1/8**	105	**4**	102

* precompressed height

DIMENSIONS: PSHR-2S

Model PSHR-2S	L in	L mm	W in	W mm	H in	H mm	H2* in	H2* mm	R in	R mm
800–1800	**6 1/2**	165	**5**	127	**11 1/2**	292	**5**	127	**4**	102

* precompressed height

NOTES

- Spring hanger with steel spring and welded steel housing.
- Springs are precompressed to 2/3 of deflection at rated load
- Hanger is designed to allow support rod misalignment through a 30-degree arc without contacting the hanger box
- Precompression plate serves as vertical uplift stopwasher for seismically restrained equipment, duct or piping. A second jam nut must be added to lock it in place.
- Coupling (by others) is required for attaching to support rod
- Minimum 50% additional travel to solid
- All elements safe at solid loading
- All hardware zinc-plated, Grade 2 minimum
- Springs and hanger boxes are powder-coated

Project:		plan view of hanger locations	1:	6:
Customer:			2:	7:
Consultant:			3:	8:
Dwg No.:	**Rev:**	**Drawn by:**	4:	9:
V-A Project Manager:			5:	10:
			QTY of sets required:	
TAG:		EQUIPMENT:		
COMMENTS:				DATE: