VIBRO-ACOUSTICS®
A Swegon Group company
MEMBER VISCMA

tel: 416-291-7371 1-800-565-8401
fax: 416-291-8049 1-888-811-2264
web: www.vibro-acoustics.com
eml: info@vibro-acoustics.com

1″ (25 mm) Deflection CM Closed Mount Spring Isolators

CM-1

File No.: DS-CM1-005 Date: 23 Sep 2013
Supersedes: DS-CM1-004 Date: 15 Jun 2011

CM-1N

shown with cut-away

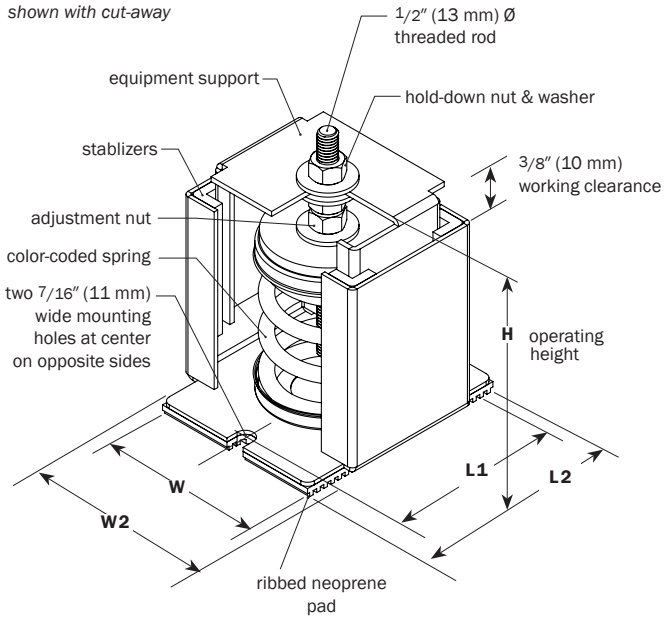

CM-1S

shown with cut-away

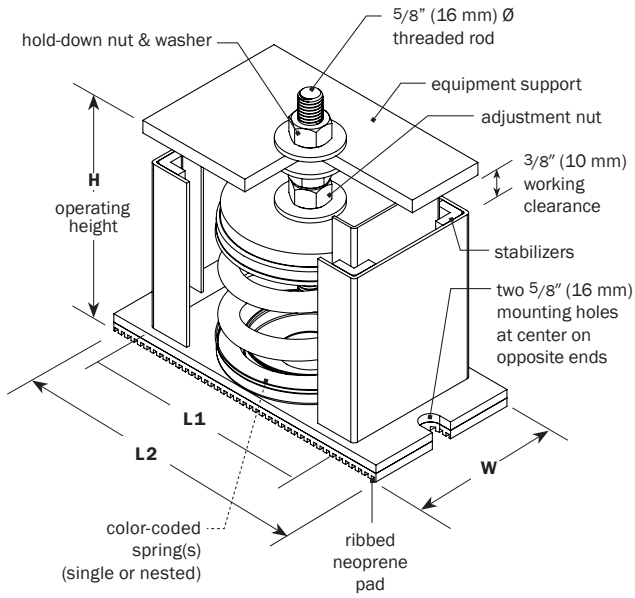

PERFORMANCE

Model	Spring Color	Rated Load	Deflection at rated load	Isolator Weight †
	outer-inner	**lb** kN	**in** mm	**lb** kg
CM-1N-50*	Blue	**50** 0.22	**1.0** 25	**5.7** 2.6
CM-1N-100*	White	**100** 0.44	**1.0** 25	**6.0** 2.7
CM-1N-150*	Orange	**150** 0.67	**1.0** 25	**6.0** 2.7
CM-1N-200	Grey	**200** 0.89	**1.0** 25	**6.2** 2.8
CM-1N-300	Black	**300** 1.33	**1.0** 25	**6.3** 2.9
CM-1N-400	Green	**400** 1.78	**1.0** 25	**6.4** 2.9
CM-1N-500	Yellow	**500** 2.22	**1.0** 25	**6.8** 3.1
CM-1N-600	Red	**600** 2.67	**1.0** 25	**6.9** 3.1
CM-1N-800	Blue	**800** 3.56	**1.0** 25	**7.1** 3.2
CM-1S-900	Orange-Green	**900** 4.00	**1.0** 25	**14.4** 6.5
CM-1S-1000	White	**1000** 4.45	**1.0** 25	**14.5** 6.6
CM-1S-1100	White-White	**1100** 4.89	**1.0** 25	**15.2** 6.9
CM-1S-1200	White-Grey	**1200** 5.34	**1.0** 25	**15.4** 7.0
CM-1S-1300	White-Black	**1300** 5.78	**1.0** 25	**15.6** 7.1
CM-1S-1400	White-Green	**1400** 6.23	**1.0** 25	**15.6** 7.1
CM-1S-1500	White-Yellow	**1500** 6.67	**1.0** 25	**16.0** 7.2
CM-1S-1600	White-Red	**1600** 7.12	**1.0** 25	**16.0** 7.3
CM-1S-1800	White-Blue	**1800** 8.01	**1.0** 25	**16.3** 7.4

*for smaller isolator, see CM-SN † weights are approximate

DIMENSIONS: CM-1N

Model	L1	L2	W	W2	H
CM-1N	**in** mm	**in** mm	**in** mm	**in** mm	**in** mm
50–800	**5 1/8** 130	**5 3/4** 146	**4 1/2** 114	**5 1/4** 133	**5 3/4** 146

DIMENSIONS: CM-1S

Model	L1	L2	W	H
CM-1S	**in** mm	**in** mm	**in** mm	**in** mm
900–1800	**8 1/4** 209	**9** 229	**4 1/2** 114	**6 1/8** 156

NOTES

- Laterally supported, housed spring type isolator with telescoping equipment support plate, leveling bolt and hold-down nut for attaching equipment.
- Springs are supported with a cup on a metal base plate complete with a ribbed neoprene vibration isolation pad, 1/4″ (6 mm) thick, bonded to the base plate.
- Steel telescoping housing incorporates neoprene stabilzers that prevent metal-to-metal contact while resisting movement and provides vertical damping.
- Minimum 50% additional travel to solid
- Minimum k_x/k_y ratio of 0.8

Project:		plan view of mount locations	1:	6:
Customer:			2:	7:
Consultant:			3:	8:
Dwg No.:	**Rev:**	**Drawn by:**	4:	9:
V-A Project Manager:			5:	10:
			QTY of sets required:	
TAG:		EQUIPMENT:		
COMMENTS:				DATE: